GENERAL CATALOGUE PHOTOVOLTAIC

> **2015-2016**

RIELLO ELETTRONICA
AROS
SOLAR TECHNOLOGY

RIELLO ELETTRONICA

AROS

SOLAR TECHNOLOGY

Riello Elettronica and Riello UPS.

Let us continuously transform energy.

Thanks to the credibility gained over decades of activity and presence in diverse markets, Riello Elettronica is a secure point of reference in the industrial world. With Riello UPS brand, the company is currently the world leader in the UPS (market) segment.

AREAS OF BUSINESS

A world without energy cannot be imagined. Everything moves and depends on energy. In our advanced society, any interruption to the power supply, like an electricity transmission grid black-out, brings home the fundamental importance of energy in our every-day lives. If we wish to maintain the delicate balance between man and nature, energy must be managed, generated and supplied securely, with minimum environmental impact. Environmental considerations are now at the heart of every project and investment decision and reflect the real need of changing our thoughts on the production and consumption of energy.

ENERGY | Our core business is energy conversion and the production of Uninterruptible Power Supplies (UPS) devices that guarantee the quality of electricity and continuity of business, power supply and the correct functioning of systems even under critical conditions. The Riello Elettronica Group passionately pursues the objective of reducing energy consumption to contribute to the sustainable development of our planet. We intend to achieve this objective with a combination of eco-sustainable projects, research and investment in new technologies for clean and renewable (energy) sources and by creating solar energy conversion systems (inverters) and cogeneration systems.

AUTOMATION | The Group has a strong presence in the sector for control and domestic and industrial automation systems. We work with a passion for progress, completely adhering to laws, regulations and the environment. We design, develop, produce and distribute complete access control automation systems.

SECURITY | We design and produce a complete range of anti-intrusion, fire detection and home automation solutions. Our products are designed to guarantee top-notch performances and maximum levels of employee security. We use advanced technologies to create products that conform to international quality standards.

BUILDING MANAGEMENT | The Group is also involved in the building management and environmental protection by investing in agricultural holdings to develop and reclaim the land.

Continuous growth and outstanding performance: This is Riello Elettronica, the expression of an entrepreneurial tradition oriented towards innovation, global challenges and the development of the "Made in Italy" technology in the international markets.

COMPANY DIVISIONS

ENERGY

Riello UPS Leader in uninterruptible power supply thanks to a complete range of professional UPS (Uninterruptible Power Supply).

Aros Solar Technology Photovoltaic inverters (FV) and energy storage systems for any requirement, from small domestic systems to solar energy stations.

EnerBlu Cogeneration Cogeneration systems for energy saving requirements.

AUTOMATION

Cardin A wide range of automation systems for access control.

Ceimu Hydraulic PV plants and lubrication and automation systems for a wide variety of industrial applications.

SECURITY

AVS Electronics Anti-intrusion systems, fire alarms and home automation.

Gamma Systems Products for worker security in hazardous areas.

OFFICE

Technology and innovation have always been distinctive traits of Riello Elettronica. These are the factors behind our global and local success and the expression of an entrepreneurial tradition that can be found in and around Verona. We are proud to maintain close ties with our local communities with our sponsoring and donation programmes that support local cultural activities, sports and charities and express the growing social responsibility of the Group.

23
SUBSIDIARIES

800
EMPLOYEES

80
COUNTRIES PRESENT

9
PRODUCTION SITES

2014 Data

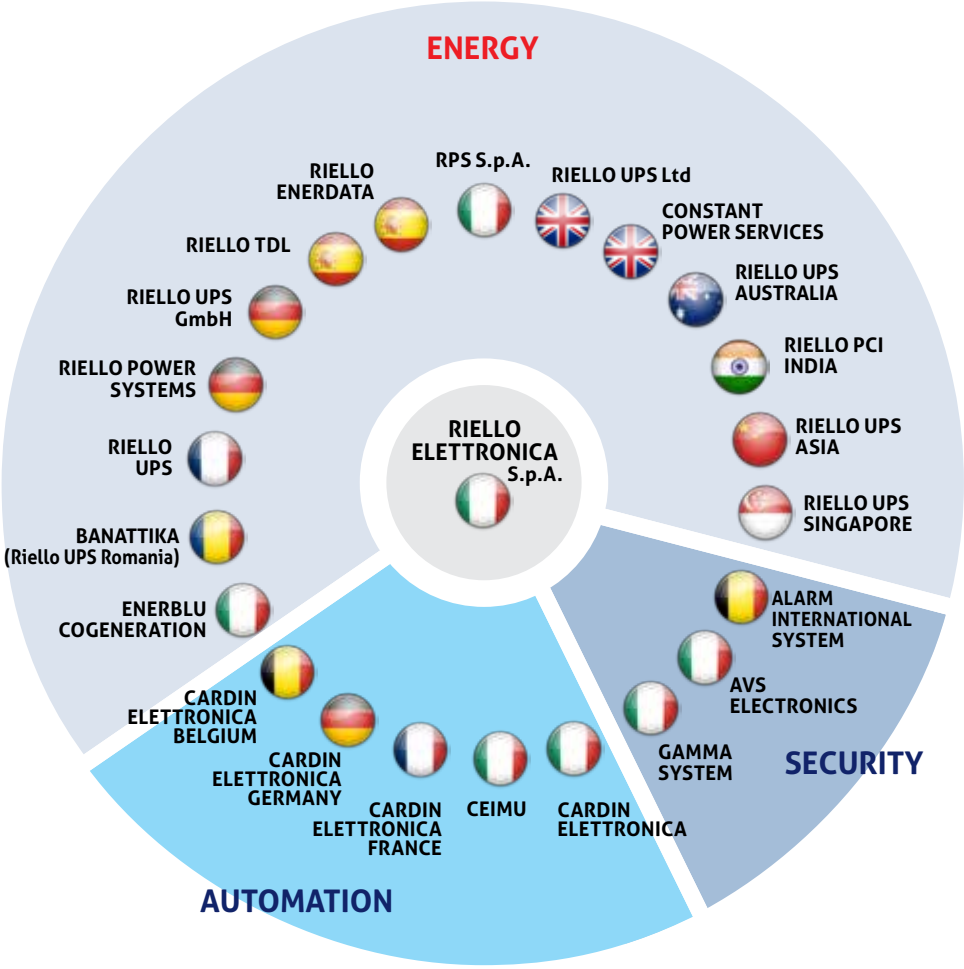

Service excellence and certification

Service

The value of being a partner.

In a company like AROS Solar Technology, support and services to users and the company employees are part of a project for the ongoing search for quality and excellence, representing the starting point for building a partnership with customers which becomes stronger every day.

That's why the Control Centre, the feather in the cap of a system built around the real needs of those who use AROS Solar Technology products and solutions, is able to read the status of the appliances in real-time across the network, and obtain immediate intervention in the event of an emergency. That's why ongoing training for technical and commercial operators at the main AROS Solar Technology site or at the sites of its customers ensures high problem solving expertise and very low response times. That's why the success of AROS Solar Technology goes beyond national borders.

Certification

The basis of a solid relationship.

Obtaining prestigious certification such as Quality System certification (issued by DNV) and UNI EN 9001:2008 for the design, production, sales and after-sales service for its products, it is not a source of pride for AROS Solar Technology but represents a relationship, with its customers and its employees, which is destined to grow day by day.
Those who, like AROS Solar Technology, provide state-of-the-art technology solutions, must necessarily be subject to ongoing, strict controls of their business processes and must safeguard and protect their employees and customers. To continue to believe in quality and pursue excellence.

Research and environment

Research and development

Powering quality directly.

The size of a company and its vocation for growth is measured in the importance of its efforts in research. The AROS Solar Technology Research and Development department, which grows each year in terms of investments and personnel, is our beating heart.

Here, the components that make AROS Solar Technology synonymous with innovation and customised, specialised solutions are designed. Here, competent, passionate people spend every day solving real user problems, seeking, in each problem, the key to creating better-performing inverters.

Using environment simulators. sophisticated analysis tools and CAD systems, the AROS Solar Technology Research and Development department creates the technologies of the future, designing a new way of living, of relating to the environment, of growing together.

The environment

Natural attention.

The commitment to design, produce and distribute products and solutions with a low environmental impact, paying attention to the natural environment and its protection are not only proven by certification such as ISO 14001:2004, or verified procedures such as the management and recycling of waste electrical and electronic equipment in compliance with EU guidelines (RAEE).

AROS Solar Technology's commitment to the environment is an integral part of its mission: choosing a sector such as renewable energy, which is crucial for the future of us all, is the clearest demonstration of the awareness of AROS Solar Technology, which does not use hazardous substances in the products it sells (RoHS), but with every product, attempts to find the most accurate response for a high-efficiency future in an environment that needs to be safeguarded and protected.

Overview

TL Inverters

Sirio EASY

EASY 1500

EASY 2000

EASY 3000

Sirio EVO

EVO 1500

EVO 2000

Central Inverters

Sirio

K12

K15

K18

K25

K25 HV

K33

K33 HV

K40

K40 HV

EVO 3000

EVO 4000

EVO 5000

EVO 6000

EVO 10000

EVO 12500

K64

K64 HV

K80

K80 HV

K100

K100 HV

K200

K200 HV

K250 HV

Overview

HV-MT Central Inverters

Sirio

K100 HV-MT

K200 HV-MT

K250 HV-MT

K330 HV-MT

SCS

Sirio Central Station

SCS 500

SCS 660

SCS 1000

K500 HV-MT

K800 HV-MT

SPS

Sirio Power Supply

SPS 10
SPS 15
SPS 20
SPS 30
SPS 40

SPS 60
SPS 80

SPS 100
SPS 120
SPS 160
SPS 200

TL Inverter

1500-12500W

HIGHLIGHTS

- **Without transformer**
- **Maximum efficiency up to 98%**
- **Night-time consultation**
- **Integrated datalogger**

SIRIO EASY

Easy installation and use

Lightness, compactness, ease of installation and configuration; these are the special characteristics of the EASY series which are particularly suited for residential and small scale commercial installations. In fact, thanks to the wide range of voltage and input current, they are found to be extremely well adapted to systems that have size limitations.

Cooling system

The cooling system used in the EASY series, comprising of a temperature controlled fan, efficiently conducts heat outside the casing, and is switched on only if strictly required. The operating temperature is controlled by specific sensors, which, in extreme cases, reduce the output power to protect the device from overheating, hence protecting the inverter from complete stoppage.

SIRIO EVO

Reliability and versatility for all requirements

The wide range of inputs, on account of the adoption of the NPC topology, together with IP65 degree of protection, allow it to be placed outside the inverter near the generator, simplifying the wiring on the DC side, reducing the loss and containing the installation costs. The multi-string technology also allows strings with different orientations and inclinations to be managed, so as to work better with multiple models and panel types, even if there is partial shading; making the inverter more flexible and assisting the installer in different configurations. The integrated DC switch disconnector allows the inverter to be rapidly and securely isolated in the event of an emergency or extraordinary maintenances.

COMMON FEATURES

Quality power supplier

TL inverters implement innovative technologies, have high quality components, are sized with a wide margin for normal operations and can provide for routine machine maintenance without compromising on the wide-ranging operational flexibility. The innovative digital control for all power stages guarantees low susceptibility for power disruptions, avoiding undesired disconnection due to variations or micro-interruptions. The Sirio EASY and EVO inverters integrate input and output surge protection and have control devices and redundancy protection- especially in the output stages- to guarantee operability and continuous operation.

Higher conversion efficiency

The Sirio EASY and EVO series inverters have been manufactured with galvanic separation, optimising the size and weight and thereby improving the ergonomics of the entire system. Thanks to the use of "transformerless" technology and state-of-the-art components, TL inverters guarantee conversion efficiencies of up to 98%.

Simple Communication

An LCD situated on the front panel displays all the main information in a simple and intuitive manner: power, energy produced and any faults, referring to other parameters such as grid voltage, the voltage of the photovoltaic modules and the grid frequency. The inverter also has an integrated datalogger which records the instantaneous data with a configurable frequency between 5 and 60 minutes in addition to saving the production data every day for a period of about two years. With a simple setting, it is also possible to activate the night-time consultation function, which queries the inverter through a (series) USB, RS485/422 bus or other slot cards (optional) even during the night when the device is normally switched off.

Internal GFCI (Ground Fault Circuit Interrupter)

In accordance with article 712.413.1.1.1.2 of section 712 of the IEC 64-8/7 Norms, the TL inverters are designed in such a manner so as not to pass continuous earth fault current. In fact, the inverters have an advanced break-down protection circuit that continuously monitors the leakage current to the ground; this protection is in fact a Class B differential. In the case of an earthing fault, the converter is deactivated and the fault is indicated with a red LED and suitable error code on the front control panel.

Certified quality

For the first time in Italy, the EASY and EVO series inverters have obtained the IMQ certification, guaranteeing reliability and product quality to the consumer. This certification, which is attested by a third party, proves that the product conforms to the characteristics of performance and security set by the Italian and European technical standards.

SIRIO EASY COMMUNICATION

Display
2 line, 16 character LCD
Communication interface
USB and 2 input voltage free contacts (for absence / presence of the signal and remote tripping) of series RS485, ModBUS and Ethernet optional (slot version)

SIRIO EVO COMMUNICATION

Display
2 line, 16 character LCD
Communication interface
RS485, USB, alarm signalling relay and 2 input voltage free contacts (for signal absence/ presence and remote tripping) in series. ModBUS and Ethernet optional (slot version)

MODEL	SIRIO EASY 1500	SIRIO EASY 2000	SIRIO EASY 3000
Rated AC power	1500 W	2000 W	3000 W
Maximum AC power	1500 W	2000 W	3000 W
INPUT			
Maximum DC voltage in an open circuit	500 Vdc		580 Vdc
MPPT operating range	100÷450 Vdc		100÷500 Vdc
MPPT at full rating range	150÷450 Vdc	200÷450 Vdc	180÷500 Vdc
Operating interval	100÷500 Vdc		100÷580 Vdc
Maximum input current	11 Adc		18 Adc
Voltage during system startup	90 Vdc		
Threshold voltage for grid supply	120 Vdc	150 Vdc	
Shut down voltage	60 Vdc		
Ripple voltage	<3%		
Inputs number	1		2
MPPT number	1		
DC Connectors	MC4 or compatible		
OUTPUT			
Operating voltage	230 Vac		
Operating range	184÷276 Vac (1)		
Maximum power range	200÷276 Vac (1)		
Frequency range	47,5÷51,5 Hz (1)		
Frequency range setup	47÷52 Hz (1)		
Rated current	6,5 Aac	8,7 Aac	13 Aac
Maximum current	7,5 Aac	10 Aac	15 Aac
Short cirtuit current contribution	7,5 Aac	10 Aac	15 Aac
DC current injection	<32 mA	<43 mA	<65 mA
Total Harmonic Distorsion (THDi)	<4%		
Power factor	from 0,9 ind. to 0,9 cap.(1)		
Galvanic separation	No		
AC connectors	Wieland RST25		
SYSTEM			
Maximum efficiency	97,20%		97,30%
European efficiency	95,00%	95,30%	96,20%
Stand-by consumption	~9W		
Overnight consumption	1W (4W only if night-time consultation is set)		
Built-in protections	Ground fault monitoring on the DC side and fault current monitoring on the AC side (differntial class B according to IEC60755). Surge Arresters type 3		
Protection during stand-by operations	In accordance to regulations of the country of installation		
Hearth leakage detection	Yes		
Heat dissipation	Forced (temperature controlled fans)		
Operating temperature	-20°C÷50°C (+45°C no derating)		
Storage temperature	-20°C÷70°C		
Humidity	5÷95% non-condensing		
Weight	11 Kg		12 Kg
STANDARDS			
EMC	EN61000-6-3:2007 ; EN61000-6-2:2005		
Safety	EN 62109-1:2010 ; EN62109-2:2011		
Directives	2006/95/CE ; 2004/108/CE		
Grid management	CEI 0-21, Real Decreto 413/2014		

NOTE: For mechanical drawings and graphics of efficiency, refer to pag. 60

(1) These values can vary depending on the local regulations.

MODEL	SIRIO EVO 1500	SIRIO EVO 2000	SIRIO EVO 3000	SIRIO EVO 4000
Rated AC power	1500 W	2000 W	3000 W	4000 W
Maximum AC power	1500 W	2000 W	3000 W	4000 W
INPUT				
Maximum DC voltage in an open circuit	800 Vdc			
MPPT operating range	100 ÷ 720 Vdc		150 ÷ 720 Vdc	
MPPT at full rating range	170 ÷ 720 Vdc	220 ÷ 720 Vdc	240 ÷ 720 Vdc	270 ÷ 720 Vdc
Operating interval	100 ÷ 800 Vdc		150 ÷ 800 Vdc	
Maximum input current	10 Adc		13 Adc	16 Adc
Voltage during system startup	90 Vdc			
Threshold voltage for grid supply	130 Vdc	150 Vdc	220 Vdc	
Shut down voltage	60 Vdc			
Ripple voltage	<3%			
Inputs number	2			
MPPT number	1			
DC Connectors	MC4 or compatible			
OUTPUT				
Operating voltage	230 Vac			
Operating range	184 ÷ 276 Vac (1)			
Maximum power range	200 ÷ 276 Vac (1)			
Frequency range	47,5 ÷ 51,5 Hz (1)			
Frequency range setup	47 ÷ 52 Hz (1)			
Rated current	6,5 Aac	8,7 Aac	13 Aac	17,4 Aac
Maximum current	7,5 Aac	10 Aac	15 Aac	20 Aac
Short cirtuit current contribution	7,5 Aac	10 Aac	15 Aac	20 Aac
DC current injection	<32 mA	<43 mA	<65 mA	<87 mA
Total Harmonic Distorsion (THDi)	<4%		<3,5%	
Power factor	from 0,9 ind. to 0,9 cap.(1)			
Galvanic separation	No			
AC connectors	Wieland RST25			
SYSTEM				
Maximum efficiency	97%	96,65%	97,1%	
European efficiency	>94,75%	>93,3%	>95,65%	96,15%
Stand-by consumption	~9W			
Overnight consumption	1W (4W only if night-time consultation is set)			
Built-in protections	Ground fault monitoring on the DC side and fault current monitoring on the AC side (differntial class B according to IEC60755). Surge Arresters type 3			
Protection during stand-by operations	In accordance to regulations of the country of installation			
Hearth leakage detection	Yes			
Heat dissipation	Convection			
Operating temperature	-20°C ÷ 60°C (+45°C no derating)			
Storage temperature	-20°C ÷ 70°C			
Humidity	4 ÷ 100% condensing			
Weight	24 Kg			
STANDARDS				
EMC	EN61000-6-3:2007 ; EN61000-6-2:2005			
Safety	EN 62109-1:2010 ; EN62109-2:2011			
Directives	2006/95/CE ; 2004/108/CE			
Grid management	CEI 0-21 , CEI 0-16, A70, VDE AR N 4105, VDE 0126-1-1, Real Decreto 413/2014, PO12,3			

NOTE: For mechanical drawings and graphics of efficiency, refer to pag. 60

(1) These values can vary depending on the local regulations.

MODEL	SIRIO EVO 5000	SIRIO EVO 6000	SIRIO EVO 10000	SIRIO EVO 12500
Rated AC power	5000 W	6000 W	10000 W	12500 W
Maximum AC power	5000 W	6000 W	10000 W	12500 W
INPUT				
Maximum DC voltage in an open circuit	800 Vdc		1000 Vdc	
MPPT operating range	150 ÷ 720 Vdc		150 ÷ 900 Vdc	
MPPT at full rating range	240 ÷ 720 Vdc	270 ÷ 720 Vdc	300 ÷ 800 Vdc	360 ÷ 800 Vdc
Operating interval	150 ÷ 800 Vdc		150 ÷ 1000 Vdc	
Maximum input current	13 Adc for MPPT	16 Adc for MPPT	18 Adc for MPPT	
Voltage during system startup	110 Vdc			
Threshold voltage for grid supply	220 Vdc			
Shut down voltage	60 Vdc		70 Vdc	
Ripple voltage	<3%			
Inputs number	4			
MPPT number	2			
DC Connectors	MC4 or compatible			
OUTPUT				
Operating voltage	230 Vac		400 Vac	
Operating range	184 ÷ 276 Vac (1)		318 ÷ 480 Vac (1)	
Maximum power range	200 ÷ 276 Vac (1)		346 ÷ 480 Vac (1)	
Frequency range	47,5 ÷ 51,5 Hz (1)			
Frequency range setup	47 ÷ 52 Hz (1)			
Rated current	21,7 Aac	26 Aac	14,5 Aac	18 Aac
Maximum current	25 Aac	30 Aac	17 Aac	21 Aac
Short cirtuit current contribution	25 Aac	30 Aac	17 Aac	21 Aac
DC current injection	<108 mA	<130 mA	<72,5 mA	<90 mA
Total Harmonic Distorsion (THDi)	<3%		<4%	
Power factor	from 0,9 ind. to 0,9 cap.(1)			
Galvanic separation	No			
AC connectors	Spring terminals 16 mmq		Wieland RST25	
SYSTEM				
Maximum efficiency	97,15%	97,2%	98%	
European efficiency	> 96%	96,3%	97,6%	97,7%
Stand-by consumption	~9W		~1W	
Overnight consumption	1W (4W only if night-time consultation is set)		0,6W (5W only if night-time consultation is set)	
Built-in protections	Ground fault monitoring on the DC side and fault current monitoring on the AC side (differntial class B according to IEC60755). Surge Arresters type 3			
Protection during stand-by operations	In accordance to regulations of the country of installation			
Hearth leakage detection	Yes			
Heat dissipation	Convection		Forced (temperature controlled fans)	
Operating temperature	-20°C ÷ 60°C (+45°C no derating)			
Storage temperature	-20°C ÷ 70°C			
Humidity	4 ÷ 100% condensing			
Weight	35 Kg		50 Kg	
STANDARDS				
EMC	EN61000-6-3:2007 ; EN61000-6-2:2005			
Safety	EN 62109-1:2010 ; EN62109-2:2011			
Directives	2006/95/CE ; 2004/108/CE			
Grid management	CEI 0-21 , CEI 0-16, A70, VDE AR N 4105, VDE 0126-1-1, Real Decreto 413/2014, PO12,3			

NOTE: For mechanical drawings and graphics of efficiency, refer to pag. 60

(1) These values can vary depending on the local regulations.

Central Inverters

12-250 kW

HIGHLIGHTS

- **With low frequency insulating transformer**
- **Full rated power up to 45 °C**
- **Colour LCD touch screen display with datalogger functions**
- **Suitable for operating with modules that require the earthing of a pole**

Sirio Central inverters allow direct connection to the low voltage grid ensuring the galvanic separation compared to direct current installations. The generous rating of the transformer and the other inverter components provides a return of the highest among the units of the same category.

Maximum energy and safety

The Maximum Power Point Tracking (MPPT) research algorithm implemented in the control system of Sirio Central inverters allows full use of the photovoltaic generator in any radiation and temperature conditions, making the plant work constantly at maximum efficiency. In the absence of solar radiation the converter goes on standby and resumes normal operation when there is radiation again. This feature reduces self-consumption to a minimum and maximizes energy efficiency. The use of speed-controlled fans helps to optimize the overall efficiency of the inverter. Fan operation that is linked to the

temperature also increases the expected lifespan and reduces costs incurred for extraordinary maintenance.
All these design features, the careful choice of components and guaranteed quality of production according to ISO9001 standards make the three-phase inverters Sirio extremely efficient and reliable and guarantee maximum energy production.

Thermal derating

Derating as a function of temperature aimed to safeguard against overheating inverter semiconductors in the case of environments with temperatures exceeding installation specifications or for forced ventilation faults, without causing a complete block of the inverter itself. Sirio Central models ensure rated power output up to 45°C environment. If this threshold is exceeded, the inverter gradually decreases the power fed into the network in such a way as to maintain heat sink temperature within the maximum limit. Once back in the range of thermal normal operation, the inverter restores the optimal working point, again ensuring maximum power transfer.

Easy installation and maintenance

The footprint of these devices has been considerably reduced and there is no need to leave space at the side or back of the equipment since the electronics and power components are fully accessible from the front. Fully automatic operation ensures ease of use and facilitates installation and startup, thus avoiding installation and configuration errors which could lead to failures or reduced plant productivity.

Customized solutions

AROS is able on request to supply Sirio Central inverters specific to the client's needs.
Available options include the integrated isolation control and the pole/earth connection kit (positive or negative) that is required for some kinds of photovoltaic modules.

User Interface

Sirio Central inverters provide a series of new user interfaces composed of an LCD colour touch screen in a convenient 4.3" format. The millions of colours and quantity of features greatly enrich the user's interaction experience with the solar inverter.
Intuitive icons and brief messages in the set language guide users through the simple menu structure, allowing them to access all reference, configuration and inverter control features. In particular, it is possible to view a daily energy production graph and the instantaneous value of power produced, verify module temperatures and the measurements of any installed analogue sensors.

The archive section allows viewing and analysis of historical data, crossing measurements as desired (no longer two sizes at a time). By scrolling a finger along the screen, users can query values recorded in previous days, including in monthly or annual intervals, and the graphs displayed can be sent via e-mail. Internal storage allows for the archiving of about 5 years of data. However, if necessary, it is possible to delete older years by means of a special feature. Historical data produced by the inverter and that of the system card can be saved on a USB flash drive.

The device also allows users to change the €/KWh ratio, adjust display brightness, change the system date and time, assign an identification and label to the plant it belongs to, configure and customise up to 4 external analogue sensors. It also allows e-mails to be sent (for which you can set the frequency) with production data and graphs and, in the case of abnormalities, any malfunction or ignition failure alarms.

Finally, via special counters in the Info section, users can consult data regarding total produced energy, the overall hours of operation, the economic return of the plan and other technical parameters, including the amount of memory used for historical data. The graphic interface is available in Italian, English, French, Spanish and German.

Network access

The touch screen device offers many communication possibilities if a connection to the local network exists.
The inverter is compatible both with PVSER proprietary protocol on the network and with ModBUS/TCP, thus offering easy insertion in any management BMS or data analysis using an Ethernet network.
The display software can be easily and quickly updated. Moreover, with a freeware software (VNC), users can remotely view the inverter screen or interact with it from their computer or mobile device.

COMMUNICATION

Display
Colour LCD touch screen
Communication interface
Ethernet, USB, 2xRS232, 2 inputs for remote controls (inverter trip and EPO) and 3 operating status signal relays. RS485 optional (slot version)
Protocol
ModBUS and ModBUS/TCP

MODEL	SIRIO K12	SIRIO K15	SIRIO K18	SIRIO K25	SIRIO K33
Rated AC power	12 KVA	15 KVA	18 KVA	25 KVA	33 KVA
Maximum AC power	12 KW (cosφ=1)	15 KW (cosφ=1)	18 KW (cosφ=1)	25 KW (cosφ=1)	33 KW (cosφ=1)
INPUT					
Maximum DC voltage in an open circuit	800 Vdc				
MPPT at full rating range	330 ÷ 700 Vdc				
Operating interval	330 ÷ 700 Vdc				
Maximum input current	36 Adc	54 Adc	63 Adc	80 Adc	105 Adc
Threshold voltage for grid supply	390 Vdc				
Ripple voltage	<1%				
Inputs number	1				
MPPT number	1				
DC Connectors	Screw terminals				
OUTPUT					
Operating voltage	400 Vac				
Operating range	340 ÷ 460 Vac (1)				
Maximum power range	340 ÷ 460 Vac				
Frequency range	47,5 ÷ 51,5 Hz (1)				
Frequency range setup	47 ÷ 53 Hz				
Rated current	17,3 Aac	21,7 Aac	26 Aac	36 Aac	48 Aac
Maximum current	22,4 Aac	28,1 Aac	33 Aac	46 Aac	60 Aac
Short cirtuit current contribution	34 Aac	42 Aac	50 Aac	68 Aac	90 Aac
Total Harmonic Distorsion (THDi)	<3%				
Power factor	from 0,9 ind. to 0,9 cap.(1)				
Galvanic separation	Trafo BF				
AC connectors	Screw terminals				
SYSTEM					
Maximum efficiency	95,8%				
European efficiency	94,8%			94,9%	
Stand-by consumption	<32W				
Overnight consumption	<32W				
Built-in protections	Automatic circuit breaker AC side - Switch-disconnectors DC side				
Protection during stand-by operations	Yes				
Hearth leakage detection	Yes				
Heat dissipation	Controlled fans				
Operating temperature	-20°C ÷ 45°C (no derating)				
Storage temperature	-20°C ÷ 70°C				
Humidity	5 ÷ 95% non-condensing				
Weight	310 Kg	320 Kg	340 Kg	350 Kg	380 Kg
STANDARDS					
EMC	EN61000-6-3, EN61000-6-2, EN61000-3-11, EN61000-3-12				
Safety	EN62109-1, EN62109-2				
Directives	Low Voltage Directive: 2006/95/EC, EMC Directive: 2004/108/EC				
Grid management	CEI 0-21, CEI 0-16, A70, VDE 0126-1-1, G59/2, Real Decreto 413/2014, PO12.3				

NOTE: For mechanical drawings and graphics of efficiency, refer to pag. 63

(1) These values can vary depending on the local regulations.

MODEL	SIRIO K40	SIRIO K64	SIRIO K80	SIRIO K100	SIRIO K200
Rated AC power	40 KVA	64 KVA	80 KVA	100 KVA	200 KVA
Maximum AC power	40 KW (cosφ=1)	64 KW (cosφ=1)	80 KW (cosφ=1)	100 KW (cosφ=1)	200 KW (cosφ=1)
INPUT					
Maximum DC voltage in an open circuit	800 Vdc				
MPPT at full rating range	330 ÷ 700 Vdc				
Operating interval	330 ÷ 700 Vdc				
Maximum input current	130 Adc	205 Adc	260 Adc	320 Adc	650 Adc
Threshold voltage for grid supply	390 Vdc				
Ripple voltage	<1%				
Inputs number	1				
MPPT number	1				
DC Connectors	Screw terminals	Busbar			
OUTPUT					
Operating voltage	400 Vac				
Operating range	340 ÷ 460 Vac (1)				
Maximum power range	340 ÷ 460 Vac				
Frequency range	47,5 ÷ 51,5 Hz (1)				
Frequency range setup	47 ÷ 53 Hz				
Rated current	58 Aac	92 Aac	115 Aac	145 Aac	289 Aac
Maximum current	73 Aac	117 Aac	146 Aac	182 Aac	364 Aac
Short cirtuit current contribution	110 Aac	175 Aac	219 Aac	274 Aac	546 Aac
Total Harmonic Distorsion (THDi)	<3%				
Power factor	from 0,9 ind. to 0,9 cap.(1)				
Galvanic separation	Trafo BF				
AC connectors	Screw terminals	Busbar			
SYSTEM					
Maximum efficiency	95,8%	96,1%			96,2%
European efficiency	95%			95,1%	95,2%
Stand-by consumption	<32W				
Overnight consumption	<32W				
Built-in protections	Automatic circuit breaker AC side - Switch-disconnectors DC side				
Protection during stand-by operations	Yes				
Hearth leakage detection	Yes				
Heat dissipation	Controlled fans				
Operating temperature	-20°C ÷ 45°C (no derating)				
Storage temperature	-20°C ÷ 70°C				
Humidity	5 ÷ 95% non-condensing				
Weight	420 Kg	600 Kg	650 Kg	720 Kg	1580 Kg
STANDARDS					
EMC	EN61000-6-3, EN61000-6-2, EN61000-3-11, EN61000-3-12				
Safety	EN62109-1, EN62109-2				
Directives	Low Voltage Directive: 2006/95/EC, EMC Directive: 2004/108/EC				
Grid management	CEI 0-21, CEI 0-16, A70, VDE 0126-1-1, G59/2, Real Decreto 413/2014, PO12.3				CEI 0-21, CEI 0-16, A70, Real Decreto 413/2014, PO12.3

NOTE: For mechanical drawings and graphics of efficiency, refer to pag. 63

(1) These values can vary depending on the local regulations.

MODEL	SIRIO K25 HV	SIRIO K33 HV	SIRIO K40 HV	SIRIO K64 HV	SIRIO K80 HV
Rated AC power	25 KVA	33 KVA	40 KVA	64 KVA	80 KVA
Maximum AC power	25 KW (cosφ=1)	33 KW (cosφ=1)	40 KW (cosφ=1)	64 KW (cosφ=1)	80 KW (cosφ=1)
INPUT					
Maximum DC voltage in an open circuit	880 Vdc				
MPPT at full rating range	450 ÷ 760 Vdc				
Operating interval	450 ÷ 760 Vdc				
Maximum input current	59 Adc	79 Adc	98 Adc	157 Adc	196 Adc
Threshold voltage for grid supply	540 Vdc				
Ripple voltage	<1%				
Inputs number	1				
MPPT number	1				
DC Connectors	Screw terminals			Busbar	
OUTPUT					
Operating voltage	400 Vac				
Operating range	340 ÷ 460 Vac (1)				
Maximum power range	340 ÷ 460 Vac				
Frequency range	47,5 ÷ 51,5 Hz (1)				
Frequency range setup	47 ÷ 53 Hz				
Rated current	36 Aac	48 Aac	58 Aac	92 Aac	115 Aac
Maximum current	46 Aac	60 Aac	73 Aac	117 Aac	146 Aac
Short cirtuit current contribution	68 Aac	90 Aac	110 Aac	175 Aac	219 Aac
Total Harmonic Distorsion (THDi)	<3%				
Power factor	from 0,9 ind. to 0,9 cap.(1)				
Galvanic separation	Trafo BF				
AC connectors	Screw terminals			Busbar	
SYSTEM					
Maximum efficiency	96,4%	96,3%	96,2%	96,1%	
European efficiency	95,3%			94,9%	95%
Stand-by consumption	<32W				
Overnight consumption	<32W				
Built-in protections	Automatic circuit breaker AC side - Switch-disconnectors DC side				
Protection during stand-by operations	Yes				
Hearth leakage detection	Yes				
Heat dissipation	Controlled fans				
Operating temperature	-20°C ÷ 45°C (no derating)				
Storage temperature	-20°C ÷ 70°C				
Humidity	5 ÷ 95% non-condensing				
Weight	350 Kg	380 Kg	420 Kg	600 Kg	650 Kg
STANDARDS					
EMC	EN61000-6-3, EN61000-6-2, EN61000-3-11, EN61000-3-12				
Safety	EN62109-1, EN62109-2				
Directives	Low Voltage Directive: 2006/95/EC, EMC Directive: 2004/108/EC				
Grid management	CEI 0-21, CEI 0-16, A70, VDE 0126-1-1, G59/2, Real Decreto 413/2014, PO12.3				

NOTE: For mechanical drawings and graphics of efficiency, refer to pag. 63

(1) These values can vary depending on the local regulations.

MODEL	SIRIO K100 HV	SIRIO K200 HV	SIRIO K250 HV
Rated AC power	100 KVA	200 KVA	250 KVA
Maximum AC power	100 KW (cosφ=1)	200 KW (cosφ=1)	250 KW (cosφ=1)
INPUT			
Maximum DC voltage in an open circuit	880 Vdc		
MPPT at full rating range	450 ÷ 760 Vdc		
Operating interval	450 ÷ 760 Vdc		
Maximum input current	245 Adc	500 Adc	590 Adc
Threshold voltage for grid supply	540 Vdc		
Ripple voltage	<1%		
Inputs number	1		
MPPT number	1		
DC Connectors	Busbar		
OUTPUT			
Operating voltage	400 Vac		
Operating range	340 ÷ 460 Vac (1)		
Maximum power range	340 ÷ 460 Vac		
Frequency range	47,5 ÷ 51,5 Hz (1)		
Frequency range setup	47 ÷ 53 Hz		
Rated current	145 Aac	289 Aac	361 Aac
Maximum current	182 Aac	364 Aac	420 Aac
Short cirtuit current contribution	274 Aac	546 Aac	630 Aac
Total Harmonic Distorsion (THDi)	<3%		
Power factor	from 0,9 ind. to 0,9 cap.(1)		
Galvanic separation	Trafo BF		
AC connectors	Busbar		
SYSTEM			
Maximum efficiency	96,1%	96,3%	
European efficiency	95,1%	95,2%	95,3%
Stand-by consumption	<32W		
Overnight consumption	<32W		
Built-in protections	Automatic circuit breaker AC side - Switch-disconnectors DC side		
Protection during stand-by operations	Yes		
Hearth leakage detection	Yes		
Heat dissipation	Controlled fans		
Operating temperature	-20°C ÷ 45°C (no derating)		
Storage temperature	-20°C ÷ 70°C		
Humidity	5 ÷ 95% non-condensing		
Weight	720 Kg	1580 Kg	1630 Kg
STANDARDS			
EMC	EN61000-6-3, EN61000-6-2, EN61000-3-11, EN61000-3-12		
Safety	EN62109-1, EN62109-2		
Directives	Low Voltage Directive: 2006/95/EC, EMC Directive: 2004/108/EC		
Grid management	ref. SIRIO K80 HV	CEI 0-16, A70, Real Decreto 413/2014, PO12.3	

NOTE: For mechanical drawings and graphics of efficiency, refer to pag. 63

(1) These values can vary depending on the local regulations.

HV-MT Central Inverters

100-800 kW

HIGHLIGHTS

- **Suitable for direct connection to MV/LV transformers**
- **High conversion efficiency**
- **Full rated power up to 45°C**
- **Colour LCD touch screen display with datalogger functions**

In order to increase overall plant efficiency, the Sirio HV-MT Central inverters do not have an integrated transformer. This feature and the meticulous design make them ideal for use in medium- high power plants connected to a medium voltage grid.

Maximum energy and safety

The Maximum Power Point Tracking (MPPT) research algorithm implemented in the control system of Sirio Central inverters allows full use of the photovoltaic generator in any radiation and temperature conditions, making the plant work constantly at maximum efficiency. In the absence of solar radiation the converter goes on standby and resumes normal operation when there is radiation again. This feature reduces self-consumption to a minimum and maximizes energy efficiency. The use of speed-controlled fans helps to optimize the overall efficiency of the inverter.

For ensuring higher standards of safety and fire prevention in case of a internal fault in the converter, the Sirio HV-MT 330, 500 and 800 units are equipped as standard with a motorized disconnecting on DC side with undervoltage protection. Moreover, the presence of 8 or 16 inputs, protected by fuses placed on both poles, ensures the protection of the lines coming from field switchboards; this arrangement allows to avoid secondary level switchboards (DC-boxes) during design phase) with a consequent economic saving.
Fan operation that is linked to the temperature also increases the expected lifespan and reduces costs incurred for extraordinary maintenance.
All these design features, the careful choice of components and guaranteed quality of production according to ISO 9001 standards make the three-phase inverters Sirio extremely efficient and reliable and guarantee maximum energy production.

Thermal derating

Derating as a function of temperature aimed to safeguard against overheating inverter semiconductors in the case of environments with temperatures exceeding installation specifications or for forced ventilation faults, without causing a complete block of the inverter itself. Sirio Central models ensure rated power output up to 45°C environment. If this threshold is exceeded, the inverter gradually decreases the power fed into the network in such a way as to maintain heat sink temperature within the maximum limit. Once back in the range of thermal normal operation, the inverter restores the optimal working point, again ensuring maximum power transfer.

User Interface

Sirio Central inverters provide a series of new user interfaces composed of an LCD colour touchscreen in a convenient 4.3" format. The millions of colours and quantity of features greatly enrich the user's interaction experience with the solar inverter. For more information, please refer to the dedicated section on pag. 17.

Easy installation and maintenance

The footprint of these devices has been considerably reduced and there is no need to leave space at the side or back of the equipment since the electronics and power components are fully accessible from the front.
Fully automatic operation ensures ease of use and facilitates installation and startup, thus avoiding installation and configuration errors which could lead to failures or reduced plant productivity.

Customized solutions

AROS is able on request to supply HV-MT Sirio Central inverters specific to the client's needs. Available options include the integrated isolation control and the pole/earth connection kit (positive or negative) that is required for some kinds of photovoltaic modules.

COMMUNICATION

Display
Colour LCD touch screen
Communication interface
Ethernet, USB, 2xRS232, 2 inputs for remote controls (inverter trip and EPO) and 3 operating status signal relays. RS485 optional (slot version)
Protocol
ModBUS and ModBUS/TCP

MODEL	SIRIO K100 HV-MT	SIRIO K200 HV-MT	SIRIO K250 HV-MT
Rated AC power	100 KVA	200 KVA	250 KVA
Maximum AC power	100 KW (cosφ=1)	200 KW (cosφ=1)	250 KW (cosφ=1)
INPUT			
Maximum DC voltage in an open circuit	880 Vdc		
MPPT at full rating range	450 ÷ 760 Vdc		
Operating interval	450 ÷ 760 Vdc		
Maximum input current	245 Adc	500 Adc	590 Adc
Threshold voltage for grid supply	540 Vdc		
Ripple voltage	<1%		
Inputs number	1		
MPPT number	1		
DC Connectors	Busbar		
OUTPUT			
Operating voltage	270 Vac		
Operating range	245 ÷ 300 Vac (1)		
Maximum power range	245 ÷ 300 Vac		
Frequency range	47,5 ÷ 51,5 Hz (1)		
Frequency range setup	47 ÷ 53 Hz		
Rated current	214 Aac	428 Aac	535 Aac
Maximum current	277Aca	554 Aac	630 Aac
Total Harmonic Distorsion (THDi)	<3%		
Power factor	from 0,9 ind. to 0,9 cap.(1)		
Galvanic separation	No		
AC connectors	Busbar		
SYSTEM			
Maximum efficiency	98,1%		
European efficiency	97,5%		
Stand-by consumption	<32W		
Overnight consumption	<32W		
Built-in protections	Automatic circuit breaker AC side - Switch-disconnectors DC side		
Protection during stand-by operations	Yes		
Hearth leakage detection	Yes		
Heat dissipation	Controlled fans		
Operating temperature	-20°C ÷ 45°C (no derating)		
Storage temperature	-20°C ÷ 70°C		
Humidity	5 ÷ 95% non-condensing		
Weight	420 Kg	1100 Kg	1150 Kg
STANDARDS			
EMC	EN61000-6-4, EN61000-6-2, EN61000-3-11, EN61000-3-12		
Safety	EN62109-1, EN62109-2		
Directives	Low Voltage Directive: 2006/95/EC, EMC Directive: 2004/108/EC		
Grid management	CEI 0-16, A70, PO12.3		

NOTE: For mechanical drawings and graphics of efficiency, refer to pag. 66

(1) These values can vary depending on the local regulations.

MODEL	SIRIO K330 HV-MT	SIRIO K500 HV-MT	SIRIO K800 HV-MT
Rated AC power	330 KVA	500 KVA	800 kVA
Maximum AC power	330 KW (cosφ=1)	500 KW (cosφ=1)	800 KW (cosφ=1)
INPUT			
Maximum DC voltage in an open circuit	880 Vdc		1000 Vdc
MPPT at full rating range	450 ÷ 760 Vdc		530 ÷ 820 Vdc
Operating interval	450 ÷ 760 Vdc		530 ÷ 820 Vdc
Maximum input current	780 Adc	1180 Adc	1600 Adc
Threshold voltage for grid supply	540 Vdc		600 Vdc
Ripple voltage	<1%		<1%
Inputs number	8		12
MPPT number	1		1
DC Connectors	Busbar		Busbar
OUTPUT			
Operating voltage	270 Vac		320 Vac
Operating range	245 ÷ 300 Vac (1)		288 ÷ 350 Vac (1)
Maximum power range	245 ÷ 300 Vac		288 ÷ 350 Vac
Frequency range	47,5 ÷ 51,5 Hz (1)		47,5 ÷ 51,5 Hz (1)
Frequency range setup	47 ÷ 53 Hz		47 ÷ 53 Hz
Rated current	713 Aac	1070 Aac	1450 Aac
Maximum current	832 Aac	1260 Aac	1600 Aac
Total Harmonic Distorsion (THDi)	<3%		
Power factor	from 0,9 ind. to 0,9 cap.(1)		
Galvanic separation	No		
AC connectors	Busbar		
SYSTEM			
Maximum efficiency	98,1%		
European efficiency	97,5%		
Stand-by consumption	<32W		
Overnight consumption	<32W		
Built-in protections	Automatic circuit breaker AC side - Switch-disconnectors DC side		
Protection during stand-by operations	Yes		
Hearth leakage detection	Yes		
Heat dissipation	Controlled fans		
Operating temperature	-20°C ÷ 45°C (no derating)		
Storage temperature	-20°C ÷ 70°C		
Humidity	5 ÷ 95% non-condensing		
Weight	1200 Kg	1340 Kg	1580 Kg
STANDARDS			
EMC	EN61000-6-4, EN61000-6-2, EN61000-3-11, EN61000-3-12		
Safety	EN62109-1, EN62109-2		
Directives	Low Voltage Directive: 2006/95/EC, EMC Directive: 2004/108/EC		
Grid management	CEI 0-16, A70, PO12.3		

NOTE: For mechanical drawings and graphics of efficiency, refer to pag. 66

(1) These values can vary depending on the local regulations.

SCS

200 kW-1 MW

HIGHLIGHTS

- **Complete, safe and efficient "Plug & Play" solution**
- **Does not require a conditioning system**
- **AC transformer station with measurement**

How to increase the overall efficiency of a conversion system and cut installation costs. This objective can be achieved by using a Sirio Central Station (SCS) system with Sirio HV-MT Central inverters connected to a common medium voltage transformer. The devices are installed in concrete stations to prolong their useful life, improve thermal insulation and to provide resistance to atmospheric agents and the most unfavourable environmental conditions.

An integral system for large plants

Sirio Central Station solutions are available in versions ranging from 200kW to 1MW offering a complete, safe and highperforming "Plug & Play" solution. The modular system, which uses inverters housed in separate stations, each with it own MV/LV transformer, enables the inverters to have a barycentric position within the photovoltaic field to optimize installation.
The logic of having separate stations cuts production losses caused by failures and during ordinary and extraordinary maintenance operations.

The stations are built in vibrated reinforced concrete, in accordance to CEI 0-16 standards currently in force, with the Guide for Connections to the Enel Distribuzione Power Grid Ed. 1 December 2008 and with the Enel DG 2092 Construction Specifications Ed. 1 December 2008.
The structures are particularly resistant to atmospheric agents since they are treated with special plastic and waterproofing coatings which protect against the formation of cracks and seepages.

The external walls are coated with a quartz/rubber paint with a textured finish to provide optimal resistance to atmospheric agents, even in marine, mountain, industrial or very polluted environments.
The normal operating conditions of the installed equipment are guaranteed by a natural ventilation system using air vents thus avoiding recourse to air conditioning systems.
The whole structure is assembled entirely with electromechanical equipment in the factory in accordance to CEI EN 62271-202 standard, and electrical equipment where applicable, ready to be placed on site for subsequent start-up.

Optional solutions

Aros can also offer pre-assembled solutions for:
- user stations with interface and general device protection in compliance with CEI 0-16 requirements;
- Public Utility cabins implemented in compliance with ENEL unification standards DG 2092 Rev.2 with the measurement unit where the electricity distribution utility takes its readings;
- intermediate configurations from 200kW are available in addition to versions present in the catalogue;
- in-shelter execution.

Practical and complete

The SCS provides solutions that can be defined as "All in One" since they reduce the normal design phases, cut transport and installation times and come already equipped with all that is needed for system start-up. The significantly lower costs, the excellent efficiency of the whole system (due to the inverters and transformers used) and the time saving in the startup phases make the Sirio Central Station an attractive choice for optimizing return on investment.

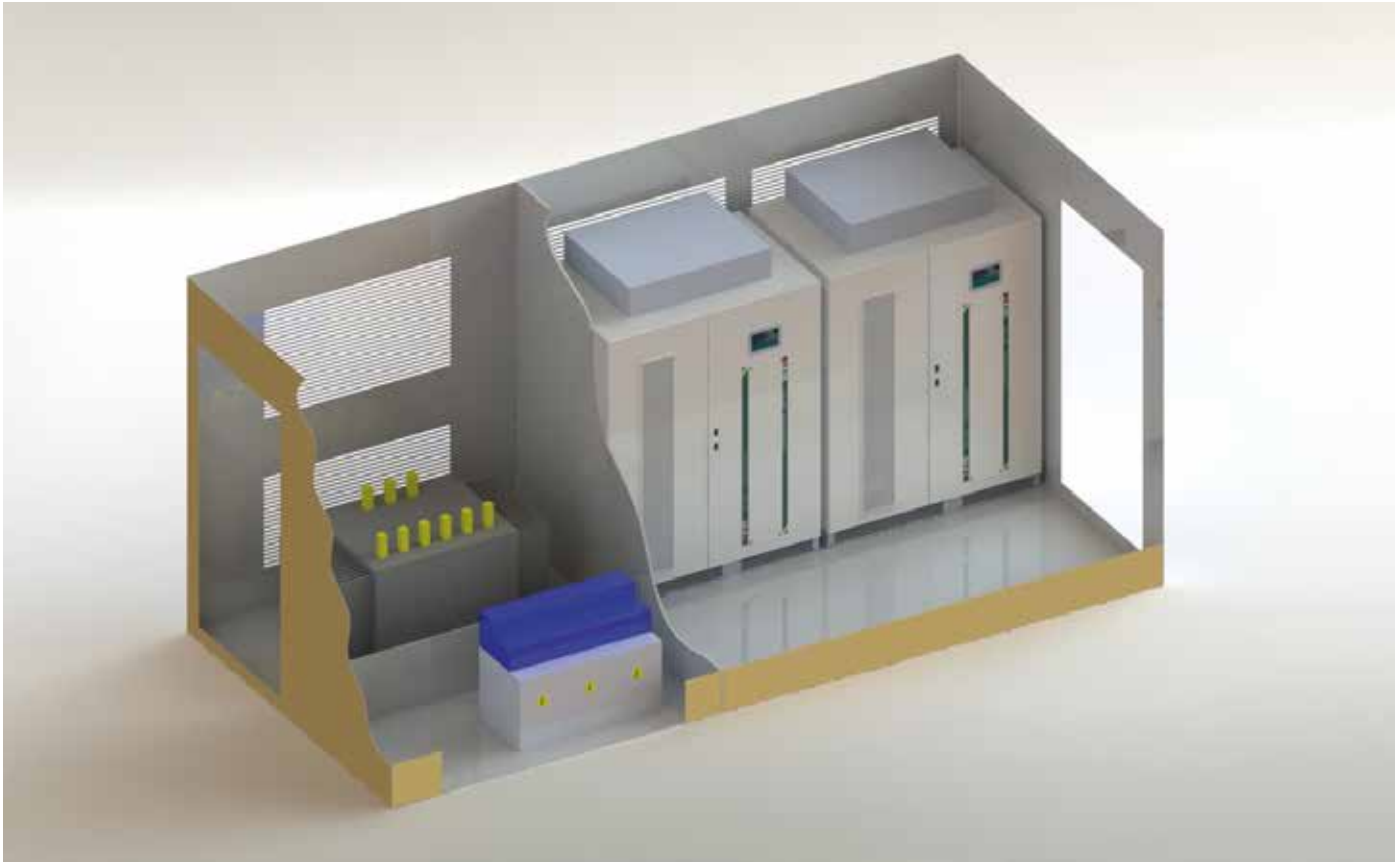

MODEL	SCS 500	SCS 660	SCS 1000
Rated AC power	500 KVA	660 KVA	1000 KVA
Maximum AC power	500 KW (cosφ=1)	660 KW (cosφ=1)	1000 KW (cosφ=1)
INPUT			
Maximum DC voltage in an open circuit	880 Vdc		
MPPT at full rating range	450 ÷ 760 Vdc		
Maximum input current	2x590 Adc	2x780 Adc	2x1180 Adc
Inputs number	2	16	16
MPPT number	2	2	2
DC Connectors	Busbar		
OUTPUT			
Operating voltage	20 kV (1)		
Frequency range	47,5 ÷ 51,5 Hz (2)		
Frequency range setup	47 ÷ 53 Hz		
Rated current (a 20KV)	14,45 Aac	19 Aac	28,90 Aac
Total Harmonic Distorsion (THDi)	<3%		
Power factor	da 0,9 ind. a 0,9 cap.(2)		
SYSTEM			
Maximum efficiency	97,3% (including values of LV/MV transformer and inverter auxiliaries)		
European efficiency	96,7% (including values of LV/MV transformer and inverter auxiliaries)		
Operating temperature	-20°C ÷ 45°C (no derating)		
Humidity	0 ÷ 95% non-condensing		
STATION FEATURES			
Materials	Block construction with reinforced concrete, class Rck 250 Kg/sq. cm with superfluidifying and waterproofing additives		
Structure	Comprising electro-soldered metal mesh reinforcement and corrugated iron, with improved adherence, both in Feb44k		
Walls	Waterproof plastic coating painted with quartz/rubber paint with a textured finish		
Cooling	Natural ventilation through metal ducting		
Dimensions (WxDxH)	5440x2500x2550 mm		
Weight	22000 Kg		
Lighting	2x18W fluorescent lamps, of which 1x18W is for emergency lightingfor each prefabricated structure		
Standard features	2 ENEL-approved meters, GSM remote reading system, extinguisher		
Conformance to specifications	CEI 0-16 ed. 2 July 2008; ENEL Guide for grid connections ed. 1 December 2008		
TRANSFORMER FEATURES			
Construction	resin or oil bath seal		
Primary nominal power	500 kVA	1 MVA	1 MVA
Secondary nominal power	2x250 kVA	2x500 kVA	2x500 kVA
In/Out voltage	2x(270V)/20000 V (1)		

(1) MV level can vary depending on utility administrator requirements.
(2) These values can vary depending on the local regulations.

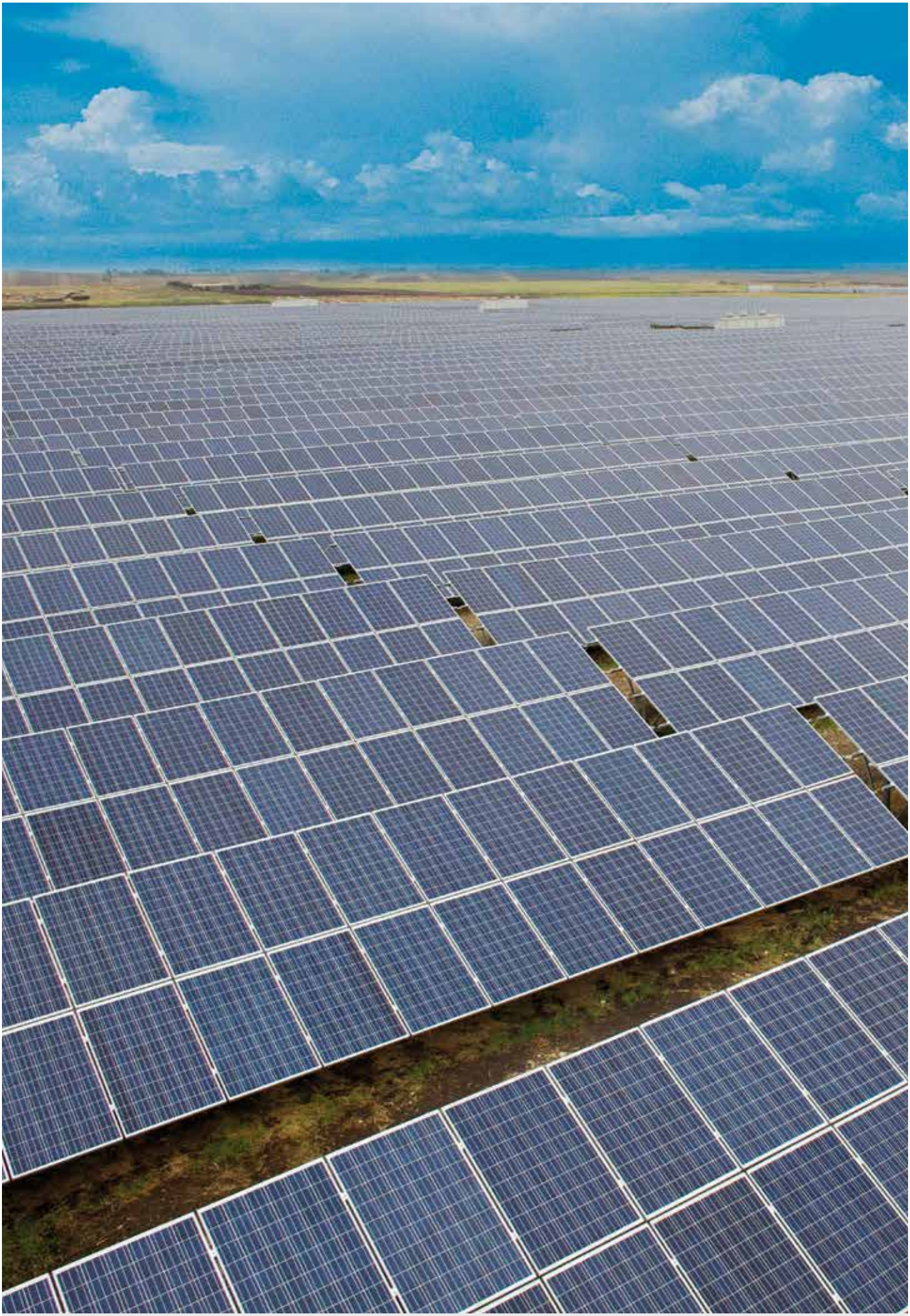

SPS

10 kVA - 200 kVA

HIGHLIGHTS

- **Compatible with On-grid and Off-grid systems**
- **Quality power supply to loads with the integration of photovoltaic energy**
- **PV plants integration with Aros inverters**

Sirio Power Supply is a device that can both increase the functionality of an On Grid photovoltaic system with AROS Solar Technology inverters as well as create an Off-grid system. In fact, thanks to energy storage which is suitably sized based on the desired load characteristics and battery life, the system can store energy produced from a renewable source which can then be used later or when there is no radiation, in addition to making the system independent of the existence of electricity distribution grid. Hence this solution allows the self-consumption of the energy produced by the centre's photovoltaic system to be managed in the best possible manner. The battery charging is done from the photovoltaic inverter or the electric grid/ generating set. The generous dimensions of the main internal components allows a higher output value to be obtained and, to guarantee the system performance, the presence of the inverter's output transformer ensures the galvanic separation between the load and the batteries.

Battery Care System

The monitoring and management of the accumulators is transferred to the Battery Care System program which can safeguard the efficiency and reliability of the batteries with following services:

- absence of ripple current with charged battery;
- charging at two voltage levels to optimise the charging current and reduce the capacity recovery times;
- compensation of the charging voltage depending on the temperature and protection against deep discharge, to reduce the phenomena of ageing and prolong battery life;
- monitor the maximum charge time to reduce the consumption of the electrolyte and further prolong battery life;
- Battery tests to diagnose performance impairment or accumulator breakdowns in time;
- Management of the discharge cycles depending on the charge state of the battery.

The device is compatible with the most common batteries used for photovoltaic applications characterised by a high number of charge and discharge cycles. To further optimise the performances, the Battery Care System also allows the manual setting of the voltage, current and charge duration parameters in case open-vented or NiCd batteries are used.

Applications

The SPS devices are best installed both in places that have a grid as well as in geographically remote, rural or isolated areas that have a heavy energy demand but with unreliable grid power or power which is provided through generating sets; thus in cases where energy needs to be stored– preferably from economical sources such as the sun. Let us look at some examples in detail:

Areas where the grid is available and there is the option of net metering [(1)]

Thanks to the batteries, the system optimises the self-consumption of the energy produced from the photovoltaic field and supplies only the grid power that is not used to supply the load or charge the battery.

Advantages:

- meets the needs of current peaks by using the energy from the battery and not the grid
- uses energy produced when the distribution grid tariffs are most expensive
- feeding energy into the grid when the tariffs are more convenient
- optimise the self-consumption period and hence reduce the TCO of the PV plants

(1): Check if this operating condition is legally permitted in the country of installation.

Areas where the grid is available without net metering

In the areas where the energy cannot be fed into the grid, the entire production of the photovoltaic field can be used to supply the load and charge the battery. Thanks to the batteries, this system allows the self-consumption of the energy produced by the photovoltaic field to be optimised.

Advantages:

- meets the needs of current peaks by using the energy from the battery and not the grid
- increase the self-consumption level of the energy produced
- reduce the TCO of the system

Areas where the grid is not available (Off-grid)

Thanks to photovoltaic energy, this system allows electric current to be brought to areas where electricity is not available and such is produced only by generating sets.

Advantages:

- meet the needs of current peaks by using the energy from the battery and not the generating sets
- reduce the use of the generating sets to the minimum
- lower fuel consumption and hence lower operational costs
- lesser expenses and inconvenience relating to transport of fuel to remote areas

ON-GRID SYSTEM WITH OPTION OF NET METERING

Condition no. 1

In case of sufficient sunlight, the system supplies the load and charges the battery; the grid must be available. The battery charge level is given by the formula:

kW (PV Inverter) – kW (load)=
kW (battery charge)

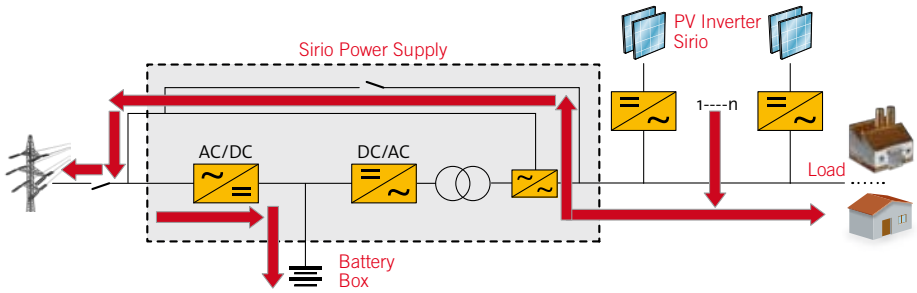

Condition no. 2

In case of insufficient sunlight, the load is supplied by the FV inverter with the aid of the battery.

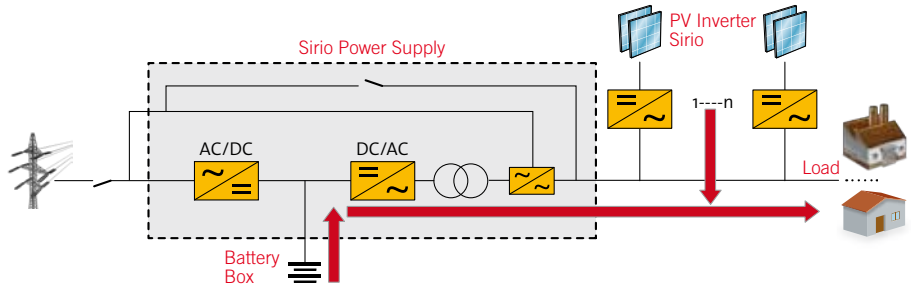

Condition no. 3
In case of insufficient sunlight and a discharged (or inhibited) battery, the load is powered by the grid through the inverter or the bypass (energy saving mode).

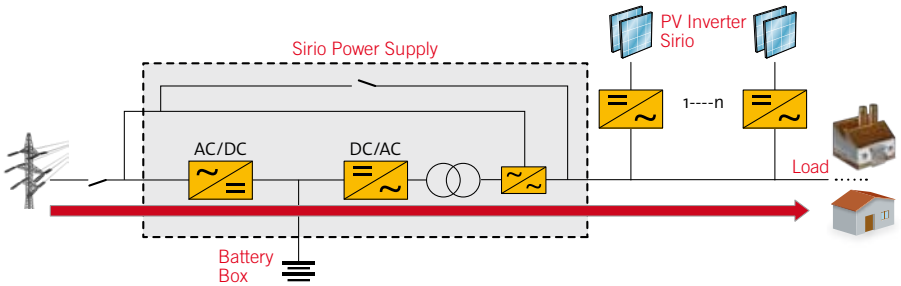

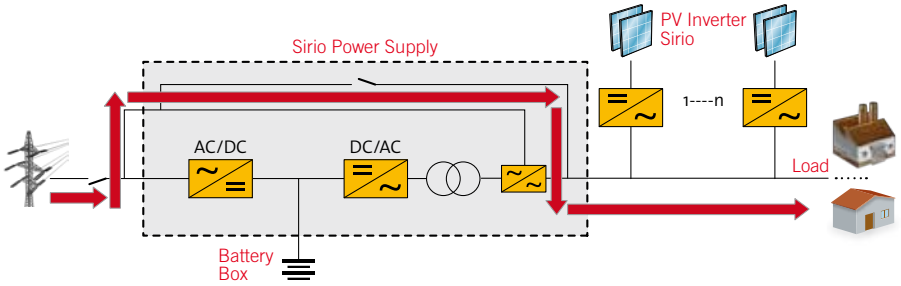

ON-GRID SYSTEM WITHOUT OPTION OF NET METERING

Condition no 1
In case of sufficient sunlight, the FV inverters supply the load and charges the battery from the SPS output; thus even if the mains supply is not available. If the load is transferred to the bypass due to a malfunction in the SPS or a current spike that is above permitted levels, the FV inverters are immediately switched off. This prevents even a small amount of energy from being transferred to the grid.

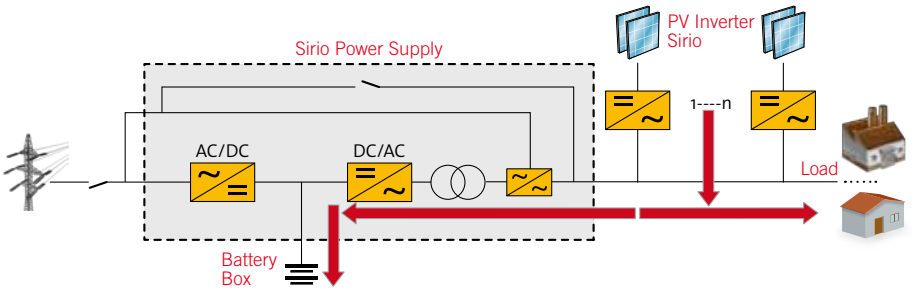

Condition no. 2
In case of insufficient sunlight, the load is supplied by the FV inverter with the aid of the battery.

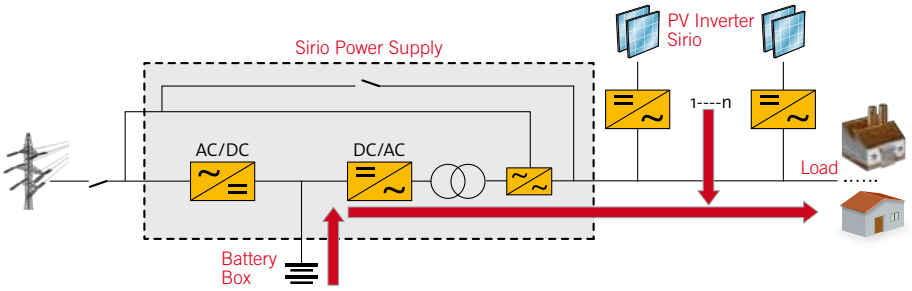

Condition no. 3
In case of insufficient sunlight and a discharged (or inhibited) battery, the load is supplied by the grid through the inverter or the bypass (energy saving mode).

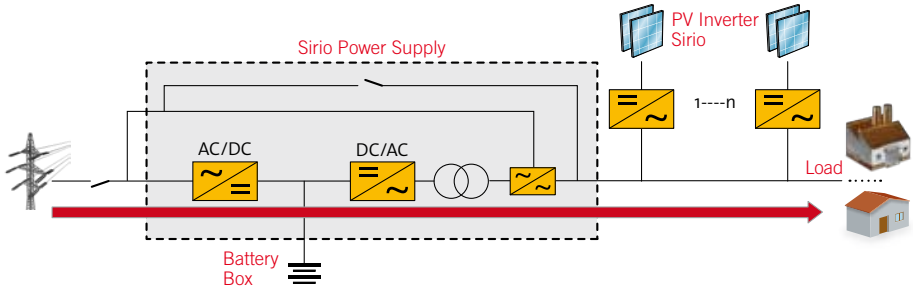

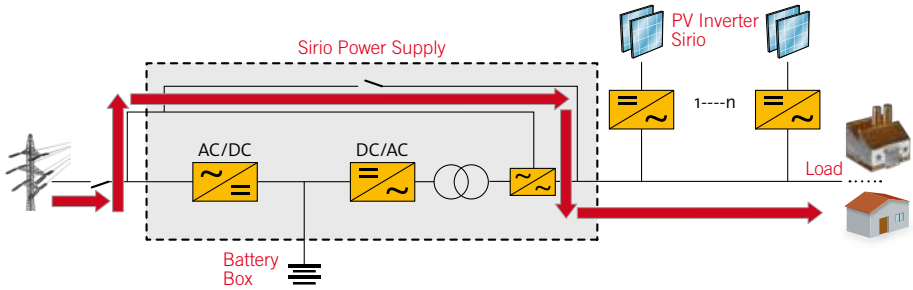

OFF-GRID SYSTEM WITH GENERATING SETS OR EQUIVALENT

Condition no. 1
In case of sufficient sunlight, the FV inverters supply the load and charges the battery from the SPS output; thus the generating sets can be switched off.

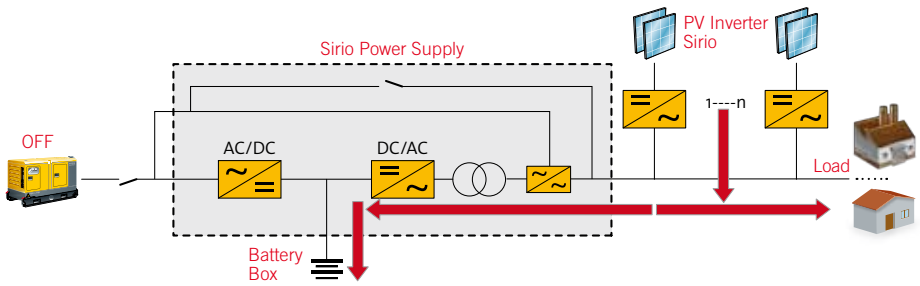

Condition no. 2
In case of insufficient sunlight, the load is supplied by the FV inverter with the aid of the battery. For optimum use of generating sets, the battery discharge level can be set.

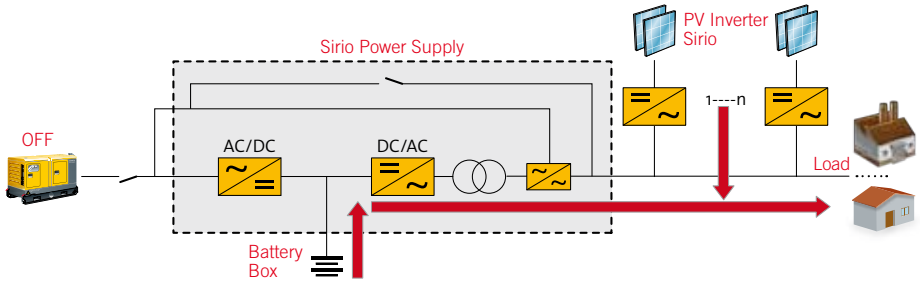

Condition no. 3
In case of lack of sunlight, the FV inverters are switched off and the battery discharged; the load is supplied by the generating set.

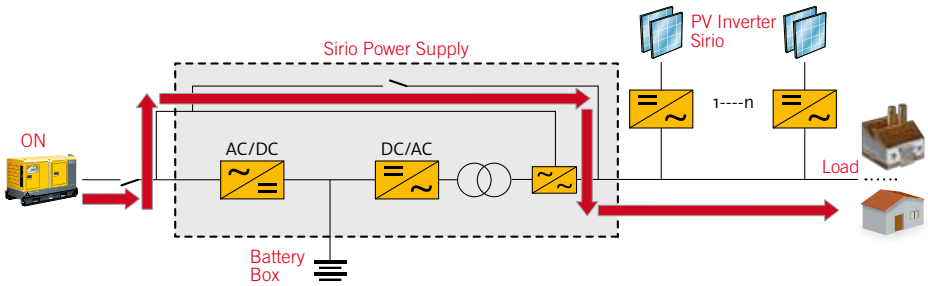

MODEL	SPS 10	SPS 15	SPS 20	SPS 30	SPS 40
INPUT					
Rated voltage	400 Vac 3Ph				
Voltage tolerance	+ 20% / - 25 %				
Frequency	45 to 65 Hz				
Soft start	0 to 100 % in 125 sec (presettable)				
BY-PASS					
Rated voltage	400 V 3Ph + N (± 20 %, presettable)				
Frequency	50 o 60 Hz				
OUTPUT					
Rated power (kVA)	10	15	20	30	40
Active power (kW)	9	13.5	18	27	36
Rated voltage	400 V 3Ph ± 20 % (presettable)				
Frequency	50 o 60 Hz				
Static stability	± 1%				
Dinamic stability	± 5%				
Voltage distorsion with linear load	1 % typ, 2 % Max				
Crest factor (Ipeak/Irms) – EN62040-3	3:1				
Voltage distorsion with non-linear load	< 3 %				
Overload	110 % for 60 min, 125 % for 10 min, 150 % for 1 min				
BATTERIES					
Type	VLRA AGM /GEL; NiCd for PV applications				
Rated voltage	384 Vdc				
Voltage residual ripple	± 1%				
Maximum charge current from SPS Output (PV Inverter)	25A	38A	50A	75A	100A
SYSTEM					
Dimensions (WxDxH)	555x740x1400				
Weight (kg)	200	220	275	315	340
Environment operating temperature	da 0 a 40°C				
RH	< 95 % non-condensing				
Colour	RAL 7035				
Protection level	IP20				
Standards	Safety IEC EN 62040-1; EMC IEC EN 62040-2; Performances IEC EN 62040-3				

MODEL	SPS 60	SPS 80	SPS 100	SPS 120	SPS 160	SPS 200
INPUT						
Rated voltage	400 Vac 3Ph					
Voltage tolerance	+ 20% / - 25 %					
Frequency	45 to 65 Hz					
Soft start	0 to 100 % in 125 sec (presettable)					
BY-PASS						
Rated voltage	400 V 3Ph + N (± 20 %, presettable)					
Frequency	50 o 60 Hz					
OUTPUT						
Rated power (kVA)	60	80	100	120	160	200
Active power (kW)	54	72	90	108	144	180
Rated voltage	400 V 3Ph ± 20 % (presettable)					
Frequency	50 o 60 Hz					
Static stability	± 1%					
Dinamic stability	± 5%					
Voltage distorsion with linear load	1 % typ, 2 % Max					
Crest factor (Ipeak/Irms) – EN62040-3	3:1					
Voltage distorsion with non-linear load	< 3 %					
Overload	110 % for 60 min, 125 % for 10 min, 150 % for 1 min					
BATTERIES						
Type	VLRA AGM /GEL; NiCd for PV applications					
Rated voltage	384 Vdc		396 Vdc			
Voltage residual ripple	± 1%					
Maximum charge current from SPS Output (PV Inverter)	150A	200A	247A	296A	395A	494A
SYSTEM						
Dimensions (WxDxH)	800x740x1400		800x800x1900			
Weight (kg)	440	520	620	650	730	830
Environment operating temperature	da 0 a 40°C					
RH	< 95 % non-condensing					
Colour	RAL 7035					
Protection level	IP20					
Standards	Safety IEC EN 62040-1; EMC IEC EN 62040-2; Performances IEC EN 62040-3					

Software and monitoring solutions

Configuration and monitoring solutions

SunVision 2

MONITORING PROGRAM

AROS Solar Technology offers the ideal solution to guarantee a protected, efficient and global system combining Sirio inverters with software designed to ensure the complete control of your plant.

SunVision 2 can monitor up to 255 elements (Inverter or StringBox) grouped up to a maximum of 64 systems. The graphical display of electrical data provides customers with a clear overview of system status and produced energy values, a calculation of the reduction of CO2 emissions and the economic returns generated are always available thanks to special counters. SunVision 2 informs constantly the user about the status of the inverters, StringBox or environment sensors, either locally or sending messages over the network. Furthermore it's possible to define a users list who will receive alarm notification by e-mails, faxes, SMS or voice messages. Appropriate graphical reports allow you to monitor daily, weekly, monthly and annual energy production. The new export routine to text format allows the use of data in various software applications for the management of subsequent statistical analysis.

Main features

- Graphic monitoring of inverter status in real time
- detailed view with all electrical data
- centralised control of inverters connected via serial port (RS232 or RS485) or via network
- inverter, StringBox or system summary display modes
- graphical visualization tool for data log monitoring
- alarm notification by e-mail, fax or text message
- multilingual support
- compatible with String Box
- compatible with the environmental sensors connected to the network via NetMan Sensor Interface
- on-line help
- data log import utilities from the previous version of SunVision

Supported operating systems

Windows 7
Windows Server 2008
Windows Vista
Windows 2003
Windows XP
Windows 2000

Sirio Data Control

MONITORING PROGRAM

Sirio Data Control was developed with the aim of simplifying the configuration of controlled devices as much as possible without compromising the main function of a program–which is supervising and monitoring devices on a LAN or through Internet up to a maximum of 300 inverters.

The graphical user interface of the Sirio Data Control has been designed to be as simple and intuitive as possible, showing all the available measurements and all the historic data of each inverter at the same time. Unlike the SunVision 2, the Sirio Data Control recovers any missing historical data from the apparatuses without the limitation of having the software always running on a dedicated PC.

Sirio Data Control also enables the user to remotely send control commands (like switching on/off, management of the active and reactive power, soft starts) to the inverter in the field.

NOTE: Compatibility is guaranteed with centralised inverters having firmware display 1.2.5 or later and with TL inverters. (EASY and EVO) with NetMan 204 Solar network card

Main features

- Monitoring AROS inverter both on LAN and through Internet
- sending control commands to an individual inverter or to the entire PV plant
- optionally displaying the system's productivity in full screen mode (for example for large monitors in large scale installations or public administrations)
- simple and self-explanatory buttons
- scanning the LAN and automatically adding the inverter without user intervention
- assigning the addresses without using the DHCP server
- real-time measurement of each inverter
- synchronising the inverter's date/time with the pc

Supported operating systems

Microsoft Windows
Linux
Mac OS X

PV Configurator 2.0

INVERTER SELECTION SOFTWARE

Identifying the most suitable inverter for the plant being constructed is an essential phase because doing so can prevent future technical problems. The PV Configurator 2.0 is a useful, quick and efficient on-line software that guides you in a few easy steps toward the optimal product choice for your residential or industrial plant, helping you to optimise energy production and, therefore, your earnings.

Main features

- On-line application
- updated photovoltaic module database
- complete range of Sirio inverters
- quick search function for optimal configuration (by power or number of panels)
- creation of a report of the selected configuration
- multilingual support

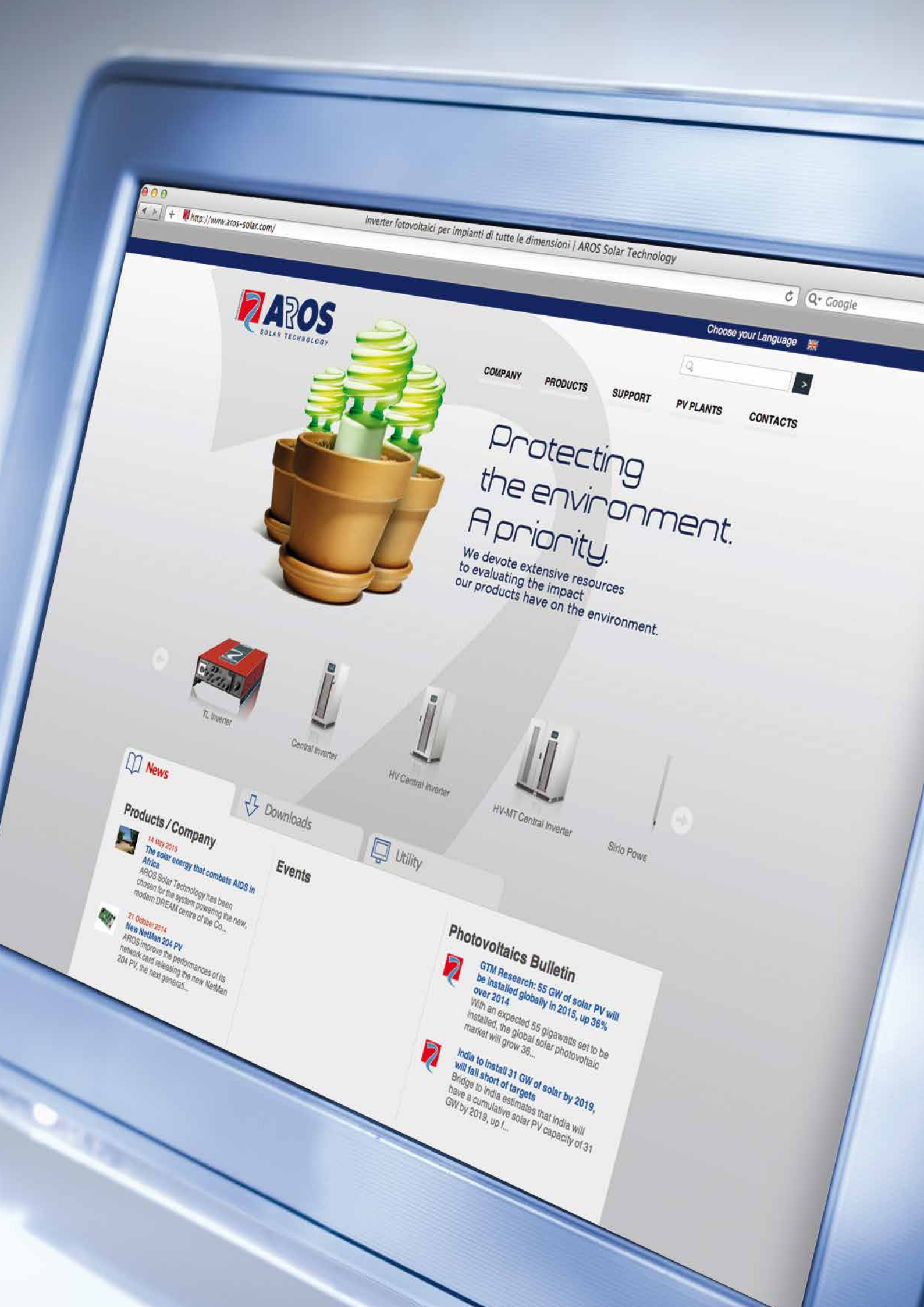
http://www.aros-solar.com/
Inverter fotovoltaici per impianti di tutte le dimensioni | AROS Solar Technology
Google
AROS
SOLAR TECHNOLOGY
Choose your Language
COMPANY
PRODUCTS
SUPPORT
PV PLANTS
CONTACTS
Protecting the environment. A priority.
We devote extensive resources to evaluating the impact our products have on the environment.
TL Inverter
Central Inverter
HV Central Inverter
HV-MT Central Inverter
Sirio Powe
News
Products / Company
14 May 2015
The solar energy that combats AIDS in Africa
AROS Solar Technology has been chosen for the system powering the new, modern DREAM centre of the Co...
21 October 2014
New NetMan 204 PV
AROS improve the performances of its network card releasing the new NetMan 204 PV, the next generati...
Downloads
Events
Utility
Photovoltaics Bulletin
GTM Research: 55 GW of solar PV will be installed globally in 2015, up 36% over 2014
With an expected 55 gigawatts set to be installed, the global solar photovoltaic market will grow 36...
India to install 31 GW of solar by 2019, will fall short of targets
Bridge to India estimates that India will have a cumulative solar PV capacity of 31 GW by 2019, up f...

Accessories

String Box

The String Box monitors the currents in photovoltaic modules and can promptly diagnose faults. The device is made of UV-resistant polyester resin and offers IP65 degree of protection. It has a general circuit breaker, type ABB T1D 160PV, to disconnect the photovoltaic field from the inverter and up to 16 strings (with a maximum input current per string of 9A) can be connected. Since it is compatible with the SunVision monitoring software, signals and alarms are sent in the event of current faults according to the thresholds set at configuration. Communication solutions include an RS485 and RS232 ports (supplied as standard), an optional slot for a NetMan Plus PV Ethernet card and analog inputs for the connection of environmental sensors (temperature, radiation and wind).

Main Features

- Parallel connection of (up to) 16 strings by 9A each (8 channels)
- local and remote indication of status and alarm conditions
- RS232 and RS485 connections supplied as standard
- one slot connection for expanding communication (e.g. Ethernet board)
- proprietary communication protocol and MODBUS RTU, both available on all the communication ports
- wide configurability of the monitoring parameters using the available software
- local history log of alarms and status
- protection fuses for each couple of inputs, 1000Vdc on positive and negative
- for each input is possible to connect wires up to 16mm²
- output switch, with optional release coil, used for inverter detachment
- monitored discharger, used against over-voltage situations, protected against over-currents, easy to restore thanks to removable cartridges
- direct input power from PV field or from auxiliary
- insulated digital inputs for local monitoring
- insulated analog inputs for environmental sensors (2xPT100, 0-10V, 4-20mA)
- configurable digital outputs with free contacts
- IP65 protection degree for external environment.

String Box Setup

This application is used to set the String Box depending on the features of the installation and the user's requirements.
Items that can be set are the analog inputs, digital inputs and outputs, read channels and alarm thresholds.

Main features

- Via Time Windows function, time windows can be set for each of the 8 inputs necessary to avoid false alarms (e.g. in case of systematic shading out in certain periods and at certain times of the year)
- configuration of the relays present on the device depending on status of the alarms
- configuration of the two inputs 4/20 mA and 0/10 V
- full management of the minimum alarm threshold parameters
- management and download of the events log

Power Reducer Kit

SELF-CONSUMPTION SOLUTIONS

In some cases the mains supply cannot accept the power generated by the photovoltaic stations but the user wishes to reduce his energy costs by installing a PV field with the intention of using all the produced energy.
To adhere to contractual limitations and not supply energy to the grid, AROS Solar Technology recommends the addition of the "Power Reducer" Kit which forces the inverter to produce only the power required to supply the connected loads.

Main features

- Compatible with the Sirio EASY, Sirio EVO and Centralised inverters
- kit comprising of:
  - RS485 card (only for Central and Sirio Easy inverters, not required for Sirio EVO)
  - power meter (modular digital multimeters with multilingual graphic LCD and RS485 output port)
  - amperometric transformers rated based on the load.

Note: See the functioning circuit diagram on page 58

NetMan 204 Solar

NETWORK AGENT

The NetMan 204 Solar board allows the management of a inverter directly linked to a 10/100 Mb LAN with standard network protocols (TCP /IP, HTTP HTTPS, SSH, SNMPv1 and SNMPv3).

Main features

- 32bit RISC processor
- 10/100 Mbps Ethernet and IPv4/6 compatible
- SunVision2 and SirioDataControl compatible
- Self-consumption monitoring and management
- SNMP v1 with RFC3433 for environment sensors management
- HTTP and HTTPS for Inverter management through web browser
- SMTP for alarms and status messages e-mail delivery
- ModBUS TCP/IP
- Datalogger for event storage (30 years).
- Wake on LAN management for TCP /IP network startup
- Other standards: DHCP, DNS, FTP, NTP, ICMP , IGMP
- Firmware update through network
- Micro USB port

Note: accessory compatible with all the PV Inverter series

RS485

COMMUNICATION ADAPTER

The RS485 card enables the creation of a BUS to connect additional inverters, displaying all parameters via connection to a PC equipped with SunVision software.

Main features

- Plug & Play installation
- data transfer up to 9.6 KBa

Note: accessory compatible with Sirio EASY and Central series

ModCOM PV

MODBUS PROTOCOL CONVERTER

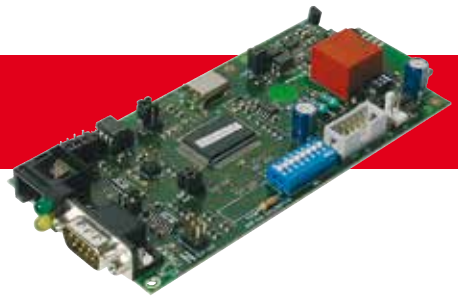

ModBUS is an open-source and royalty-free serial communication protocol, which has become an industry standard in recent years thanks its ease of use and implementation. The ModCOM PV device makes it possible to monitor AROS photovoltaic inverters via the ModBUS RTU protocol over half-duplex RS-485 serial cable.

Main features

- ModBUS/JBUS port can be configured as RS232 or RS485
- RJ-45 connector for connecting to the ModBUS network
- can be integrated with the main BMS management programs
- LED signals for communication activity
- firmware upgradeable through serial port

Note: accessory compatible with Sirio EASY and EVO.
For Central series needed for ModBUS/RTU (standard for ModBUS/TCP)

Solar View

DATA ACQUISITION DEVICE

This remote data acquisition device is capable of providing the main electric parameter information for a photovoltaic generator via an RS485 connection. By simple touch on the touch screen display , you can recall such values as panel voltage, power generated by the plant, line voltage and line current, energy produced and the amount of CO_2 unemitted. In addition, an intuitive horizontal bar indicates the percentage of instant power. Touch screen technology makes it possible to scroll through and zoom in on graphics created by the device directly on the display. Compatible with installations of up to 5 inverters, it does not require special configurations since it is capable of automatically detecting the model and related characteristics of the inverters.

Main features

- B/W 240x128 pixel LCD touch screen with LED backlight
- RS485 and USB communication ports
- multimedia graphic interface
- 12Vdc power supply

Graphics

- 5 display settings: 6-hour, 12-hour, 24-hour, weekly, and monthly
- ability to display averages or individual readings

SunGuard Monitoring solutions

SunGuard Energy Touch

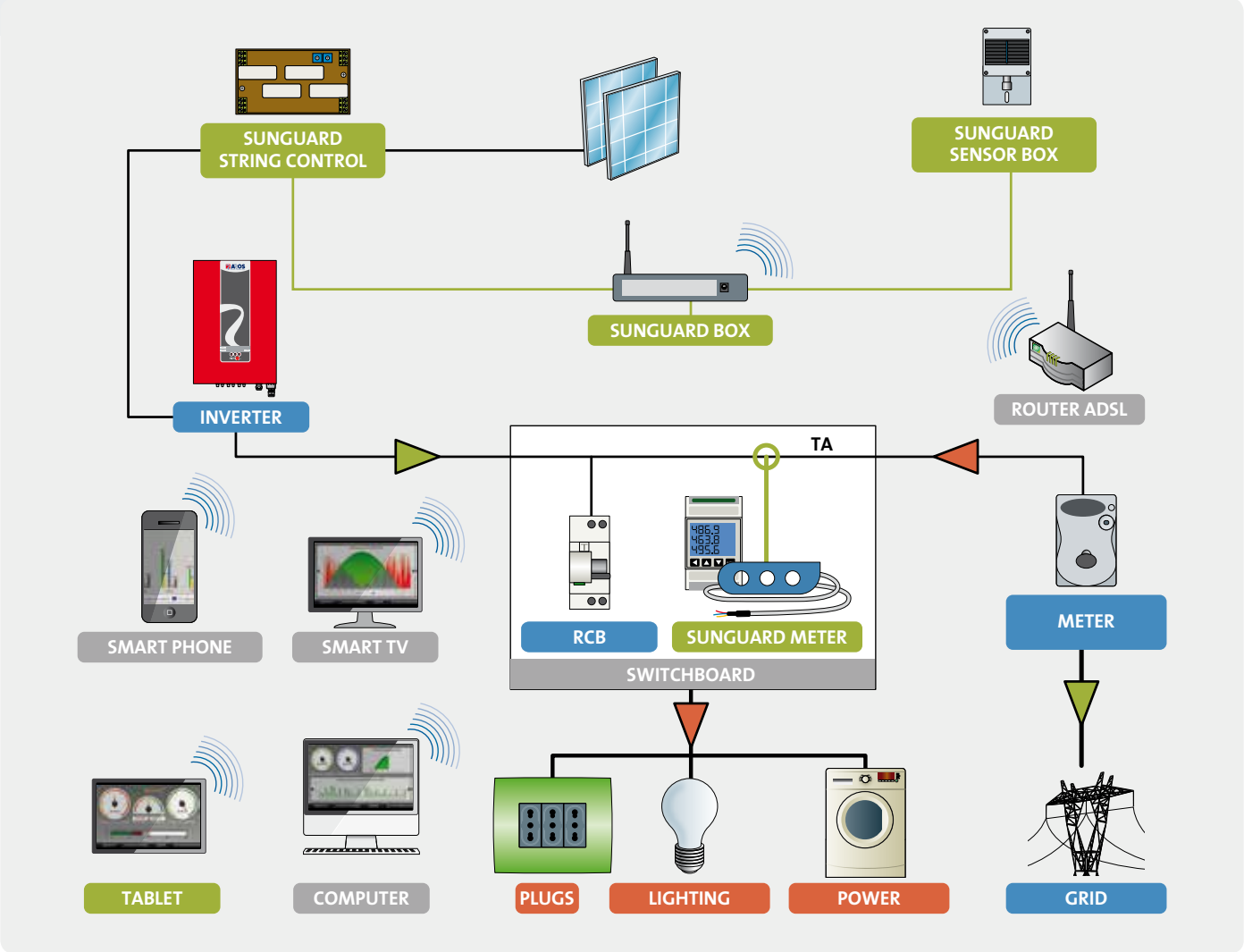

The SunGuard Energy Touch is an easily installable monitoring system for single-phase and three-phase systems. It monitors the progress of the consumption in relation to the energy produced, supplied and drawn. The SunGuard Energy Touch kit includes a SunGuard Box Wi-Fi datalogger, a bi-directional SunGuard Meter analyser with TA included and a SunGuard ready 7" Wi-Fi touch display.

The SunGuard Box datalogger must be connected to the bi-directional network analyser and the inverter and a simple configuration must be done. After alignment with the energy values of the production and the exchange meters, the system is ready for use.

The following optional monitoring tools can also be connected to the SunGuard Box datalogger for a more professional monitoring system:

- SunGuard Sensor Box, with the irradiance and temperature sensors to monitor environmental parameters that determine the energy production and performance levels of the PV plant;
- String Box or the SunGuard String Control to monitor the direct current of each individual photovoltaic string.

Components

SunGuard Box Energy Touch Wi-Fi

Datalogger Wi-Fi complete with power supply, high reception antennae, two serial RS232/ RS485 converters with screw connectors and Ethernet port. Has 4Gb of memory to collect twenty years of historical data. Connected directly to the inverter and the SunGuard Meter via a double pole wire and transmits data to the Wi-Fi display.

SunGuard Meter *(available in single-phase and three-phase versions with TA included)*

Compact and multifunctional analysers to be used in single-phase and three-phase systems. Displays the principal sizes of an electricity transmission grid, including the metering of fed and stored energy through an elegant, back-lit display. Have current transformers with integrated connection cables (1.5 mt). Do not require any setting since they are preconfigured.
Have been designed considering certain aspects that are important to the installer such as: practicality, speed of installation and compact size. There are 3 different versions: 30 A single phase (for PV plants that are about 6 kW), 63 A three-phase (for PV plants that are about 30 kW) and 125 A three-phase (for PV plants that are about 60 kW).

SunGuard display 7" Wi-Fi Touch Screen

The touch display allows the development of energy in the photovoltaic system to be controlled at a glance. Has been designed for all kinds of users and has undergone rigorous usability tests. Has four screens to provide different functions and alternative representations of the progress of the photovoltaic system. It is possible to view data that is instantly updated after a few seconds or historical values for the last twenty years. An indispensable instrument for all users of a photovoltaic system.

Optional components

To make the monitoring system more complete and professional, SunGuard Energy Touch can be supplied with the following accessories:

- **SunGuard Sensor Box**
  (has a temperature and irradiance sensor):
  To monitor the environmental parameters which affect the production capacity.
  And the performance capacity of the PV plant;

- **String Box or SunGuard String Control:**
  To monitor the direct current of the photovoltaic strings.

Display Touch: control interface

1. Instantaneous power
Display of consumed and generated power, management of power collected or fed from/ into the public grid. At the bottom lies a horizontal bar that allows to control 24/7 when energy is supplied or collected to/from the public grid.

2. PV system
Section dedicated to PV system monitoring. It allows displaying the instantaneous power, the daily output and the energy produced in the last 30 days. The theoretical power (reference power of perfect efficiency of the system) is only available when using the SunGuard Sensor Box with radiation sensor.

3. Energy tracking
Energy produced, consumed, collected, supplied and self-consumed can be compared on daily, monthly or yearly basis. Top figure shows the totals of the five energies aligned with fiscal meters.

4. Daily budget
Easy and intuitive chart to monitor energy consumption or supplied/collected to/from the grid.

Other interfaces
In addition to the touch display supplied, other instruments area available to access the monitoring interface: Windows, Linux or Mac PCs or any other computing systems with any browser (no other software installation is required); Smart TVs & SunGuard web portal interface (only for SunGuard dataloggers connected to the Internet).

1


2
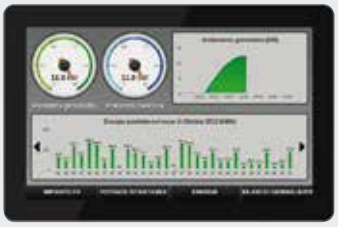

3
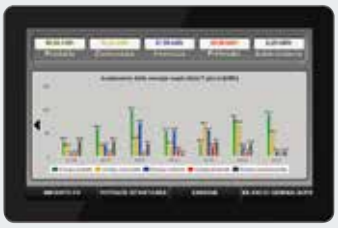

4
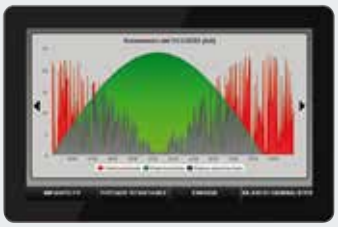

USERS

The customer

The customer can monitor locally the real time or historic trends of the PV system via SunGuard Touch Display, PC (without installing any software), Smart TV, iPhone or iPad over Wi-Fi.
The user will always know how much of the produced energy will be locally consumed or supplied and collected to/from the grid. This allows the user to analyze its energy balance to optimize the self-consumption.
If internet connectivity is available, the user can access the SunGuard portal and activate the Web monitoring to set up messages and alarms, both by email and SMS.

Installers & companies

Using a specific key access the installer can monitor all PV systems equipped with a SunGuard Energy Touch connected to the Internet. The installer can continuously monitor the systems of its customers by offering a timely and high quality maintenance service.

Dealers & installers

Dealers can monitor via the web portal all PV systems where SunGuard Energy Touch is installed and connected to the Internet. This allows to leverage on a centralized system of monitoring so that reliable statistical analyses can be performed. They may require a complete customization of the Web portal to match the corporate image. They may also provide to the customers a direct access from their website, specifically connected to the SunGuard Web portal.

The WEB Portal

Monitoring interface for PV systems

Energy Control interface for power consumption monitoring

In case of availability of an internet connection the user can register at the Web portal SunGuard (www.sunguard.it) and log in with a single account to monitor trends in production and consumption of one or more photovoltaic systems. In addition, user can activate failure alarms and generation messages. Messages can be delivered by SMS and email. The user can set telephone numbers and email addresses for message and alarm delivery.

Why register to SunGuard web portal?

Although the SunGuard Energy Touch is designed to get under control the energy production and consumption of the local system on which it is installed (without internet connection), it is strongly advised to also use the SunGuard web portal. The SunGuard web portal provides a historical archive on line and allows to receive failure alerts and messages related to the system performance, by mail and SMS. The service requires for the payment of an annual license.

Portal services

- Online support and telephone support
- Data archive
- Alarms and messages delivery through mail and SMS
- Monthly Reports in PDF for download
- App for iPhone and iPad
- Analysis and comparison of two or more variables
- Data download
- Production estimates control for 20 years

Monitored data

After a quick setup you can to monitor instantly and historically (both numerically and graphically) the following information: power output, power consumption, supplied power, collected power, self-consumed power, energy produced, energy consumed, supplied energy, collected energy, self-consumed energy.
It is possible to align the SunGuard Energy Touch values to reported values by the fiscal meter for production and exchange.

Data transmission

The local interface can be accessed via any computer equipped with a "network adapter" or a Wi-Fi link.
To gain access to the Internet ,SunGuard Box datalogger needs to be connected through a network cable or a local Wi-Fi router.
ADSL, UMTS and GPRS routers as well as SunGuard ready Access Points (compatible and preconfigured) are availa-ble through AROS Solar Technology web portal.

SunGuard

MONITORING PROGRAM

Everyday more and more photovoltaic systems, both civil and industrial, are installed without providing for adequate maintenance. Technological systems, above all when undergoing significant development, require routine and special maintenance operations to be carried out by specialised technicians. This, however, does not guarantee the complete and constant efficiency of the photovoltaic system and, even less, preventive interventions in the case of imminent energy loss or malfunction due to exogenous and/or endogenous causes. That's why SunGuard has been developed.

A professional system that closely monitors every type of photovoltaic system, as well as the environment in which it is installed. Useful for smaller installations, necessary for medium to large sized installations. SunGuard communicates data and information in real time to both the operators who perform the monitoring, as well as to the specialised technicians, thereby allowing for targeted, timely and preventive interventions. SunGuard provides for the real time monitoring of the systems' performance and, through the SunGuard Box interface, sends the data to the central calculation unit over an SNMP Protocol. The elaboration of this data, in addition to that which is received from weather stations, pyranometers, toroids and video cameras positioned upon the system, provides for the constant supervision of our systems and allows us to offer a service which is even more oriented towards maximum customer satisfaction.

Technical characteristics summary

- Remote web-based management through UMTS, GPRS, LAN network and Wi-Fi connectivity;
- monitoring of each individual inverter;
- connection to every type of environmental sensor;
- numerical and graphical display of the periodic data and reports regarding the system's productivity;
- notifications sent by email and SMS;
- pro-active management of maintenance interventions;
- web-based system management for the installers, maintenance personnel, technical assistance, help desk and final customer, through dedicated administration panels.

Main functions

- Centralised multi-system management
- multi-user functionality with various access levels
- data storage in SQL databases
- advanced formula editor
- events and actions management
- reporting system
- performance analysis
- graphics management
- integrated video camera management
- SNMP standard for extended monitoring
- access to data collected

SunGuard Box Home

DATALOGGER

For PV plants up to 20kWp with single inverter

Main features

- Plant compatibility: 1÷20kWp
- Number of monitorable inverters: 1
- Power supply: 5Vdc/10W wallmount included
- RS232/485 converter included
- Operating range: 5÷50°C
- RAM: 128Mb
- Memory: 4Gb
- Communication ports: 2 RS232, 1 RJ45 Ethernet

SunGuard Box Home Wi-Fi

DATALOGGER

For PV plants up to 20kWp with single inverter

Main features

- Plant compatibility: 1÷20kWp
- Number of monitorable inverters: 1
- Power supply: 5Vdc/10W wallmount included
- RS232/485 converter included
- Operating range: 5÷50°C
- RAM: 128Mb
- Memory: 4Gb
- Communication ports: 2 RS232, 1 RJ45 Ethernet

SunGuard Box Family

DATALOGGER

For PV plants up to 20kWp, no limit for inverters

Main features

- Plant compatibility: 1÷20kWp
- Power supply: 5Vdc/10W wallmount included
- RS232/485 converter included
- Operating range: 5÷50°C
- RAM: 128Mb
- Memory: 4Gb
- Communication ports: 2 RS232, 1 RJ45 Ethernet

SunGuard Box Family Wi-Fi

DATALOGGER

For PV plants up to 20kWp, no limit for inverters

Main features

- Plant compatibility: 1÷20kWp
- Power supply: 5Vdc/10W wallmount included
- RS232/485 converter included
- Operating range: 5÷50°C
- RAM: 128Mb
- Memory: 4Gb
- Communication ports: 2 RS232, 1 RJ45 Ethernet

SunGuard Box Small

DATALOGGER

For PV plants up to 100kWp

Main features

- Plant compatibility: 1÷100kWp
- Power supply: 24Vdc/60W DIN included
- Terminal board: MOXA type for DB9 connectors (RS485) included
- Operating range: -20÷60°C
- RAM: 64Mb
- Memory: 4Gb
- Communication ports: 1 RS232, 3 RS485, 2 RJ45 Ethernet

SunGuard Box Professional

DATALOGGER

For PV plants up to 500kWp

Main features

- Plant compatibility: 1÷500kWp
- Power supply: 24Vdc/60W DIN included
- Terminal board: MOXA type for DB9 connectors (RS485) included
- Operating range: -20÷60°C
- RAM: 64Mb
- Memory: 4Gb
- Communication ports: 1 RS232, 3 RS485, 1 RJ45 Ethernet

SunGuard Box Business

DATALOGGER

For PV plants over 500kWp

Main features

- Plant compatibility: >500kWp
- Power supply: 24Vdc/60W DIN included
- Terminal board: MOXA type for DB9 connectors (RS485) included
- Operating range: -20÷60°C
- RAM: 1Gb
- Memory: 4Gb
- Communication ports: 2 RS232, 2 RS485, 2 RS485 optoisolated, 3 RJ45 Ethernet

SunGuard String Control Kit

CURRENT SENSOR

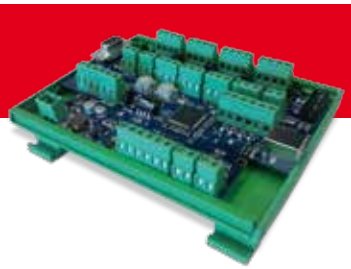

Available versions

- SGK-16 for 16 strings
- SGK-12 for 12 strings
- SGK-8 for 8 strings
- SGK-4 for 4 strings

The kit comprises of a master card to which the following monitoring tools can be connected:
- from 1 to 4 slave cards with 4 Hall effect sensors for a total of 16 channels;
- up to two 0-100mV irradiance sensors supplied with calibration certificates;
- up to four 2-4 string PT100 or PT1000 temperature probes;
- an anemometer to monitor wind speed.

Main features

- Monitoring from 1 to 1016 strings
- From 0 to 50 Ampere for string
- ModBUS communication
- RS485 connection
- 24Vdc power supply

SunGuard Sensor Kit

ENVIRONMENTAL SENSORS

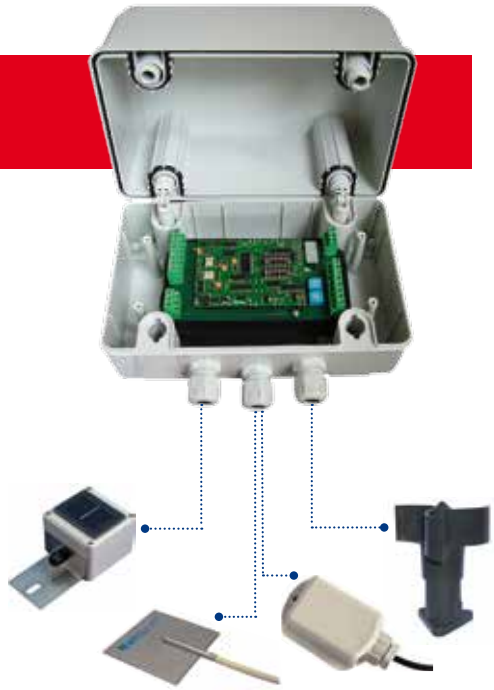

Available versions

- SensorKit-A
- SensorKit-B

Main features

- Kit-A: irradiance and temperature module sensor
- Kit-B: irradiance sensor, module temperature, environment temperature and anemometer
- Power supply: 24Vdc from SunGuard Box
- ModBUS communication
- RS485 connection

Irradiance sensor

ENVIRONMENTAL SENSORS

Compatible with String Box too

Main features

- Measurement range: 0÷1500 W/m2
- Sensor type: monocrystalline cell (33mm / 50mm)
- Sensor accuracy: ± 5% yearly average
- Electrical output: 4÷20 mA or 0÷10 V or 0÷3.125 V or 0÷150 mV
- Consumption: C. 30 mW
- Connection type: connection terminals, 1.5 mm²
- Dimensions: 150x80x60 mm (WxDxH)
- Weight: 700 g

PV module temperature sensor

ENVIRONMENTAL SENSORS

Compatible with String Box too

Main features

- Measurement range: -20÷150°C
- Sensor type: platinum resistance wire
- Electrical output: PT100
- Cable: 3 mt, connection with 3 conductors
- Mounting: tape (included)
- Dimensions: 50x50x1 mm (WxDxH)

Anemometer

ENVIRONMENTAL SENSORS

Main features

- Measurement range: 2÷200 Km/h
- Sensor accuracy: ±2%
- Cable: 15 mt
- Mounting: steel bracket included
- Dimensions: 123x138,5 mm (DxH)

Environment temperature sensor PT1000

ENVIRONMENTAL SENSORS

Main features

- Measurement range: -20÷200°C
- Sensor type: platinum resistance wire
- Electrical output: PT1000
- Cable: 2,5 mt, connection with 2 conductors
- Mounting: hole for mounting with screw included
- Dimensions: 52x50x32 mm (WxDxH)

Environment temperature sensor PT100

ENVIRONMENTAL SENSORS

Main features

- Measurement range: -35°C÷90°C
- Protection level: IP66
- Electrical output: PT100
- Dimensions: 50x52x35 mm (WxDxH)

Modem Router 3G HSPA

Main features

- 3G Wireless Router
- HSPA+ 21,6Mbps Download, 5.76Mbps Upload
- UMTS 2100MHz, GSM 850/900/1800/1900MHz
- Wireless 802.11n 300Mbps a 2.4GHz
- 4 ports LAN RJ45 10/100Mbps
- 1 port RJ11, 1 port USB 2.0, 1 slot for USIM

Note: The client must provide the device with a DATA SIM from a selected telephone operator. This is required for it to work properly.

LED Display

FOR EXTERNAL ENVIRONMENT

Available versions

- LED display
- LED display with network analyzer

Main features

- Visualization: 2-line, 16 alphanumeric characters
- Tipology: pages or scrolling (max. 512 scrolling characters)
- Management: via RS485 to the network analyzer or LAN Ethernet
- Supply: 220 V/50 Hz
- Dimensions: 1500x75x700 mm (WxDxH)
- Weight: 15 Kg

SunGuard Video Display

SIGNAL SPLITTER FOR VIDEO SYSTEMS

Available versions

- SunGuard Video Display
- SunGuard Video Display Wi-Fi

The SG-VIDEO-DISPLAY is connected to a monitor with a VGA port and the internet, it allows display with cyclical trend (about 5 seconds), the various trend-related slides of one or more photovoltaic systems monitored with the SunGuard monitoring system. The data displayed on the monitor are as follows: daily production, total production, saved trees, barrels of equivalent petroleum, weekly production, monthly production, avoided CO_2 emissions, instantaneous power.

Main features

- Power supply: 5Vdc/10W wall mount included
- Operating range: 5°C–50°C
- Communication interfaces: 1 RJ45 Ethernet, 2 RS232, VGA port

LOCAL MONITORING

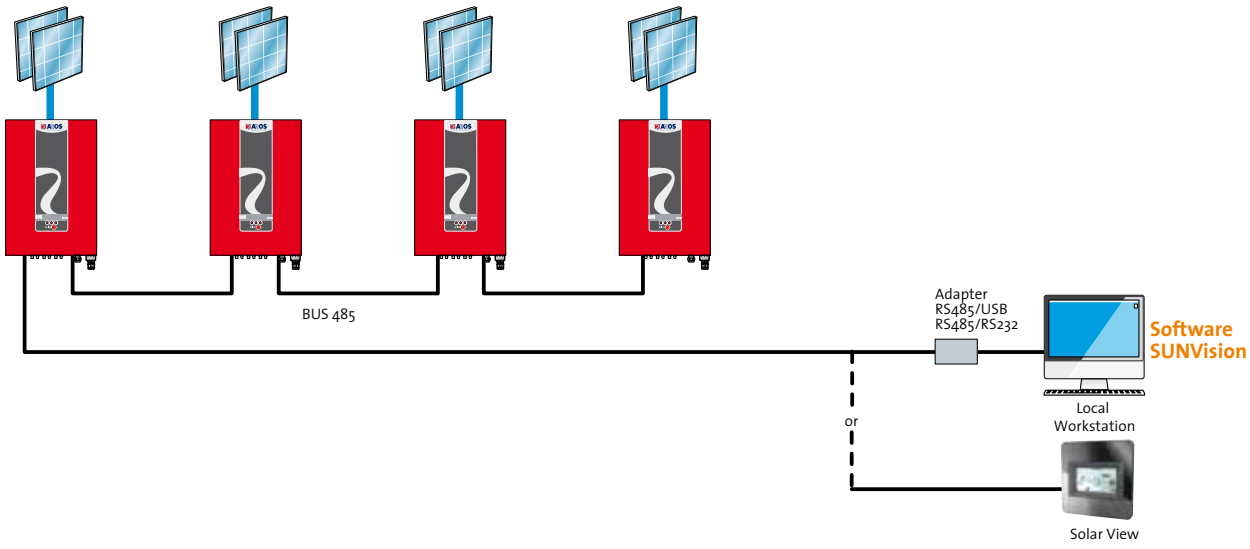

MONITORING OVER LAN

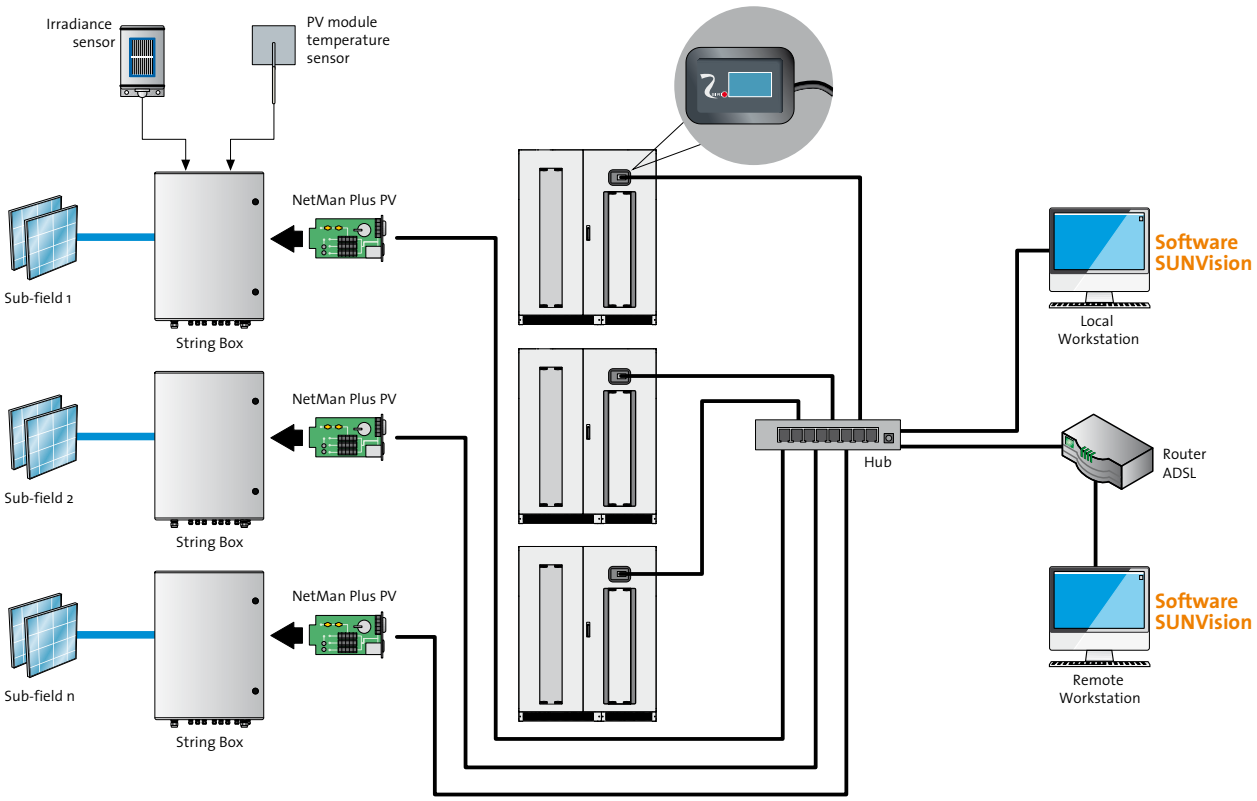

SUNGUARD SOLAR MANAGEMENT MONITORING

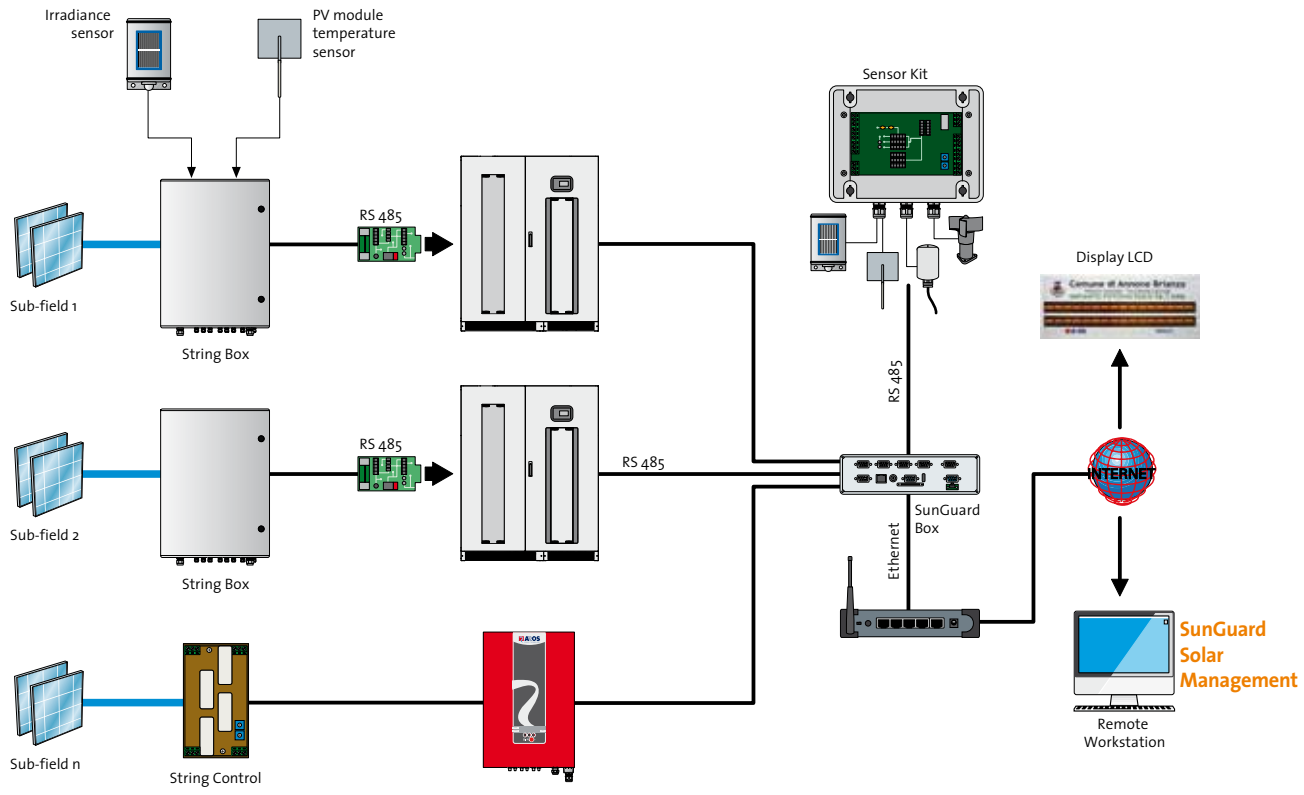

POWER REDUCER KIT

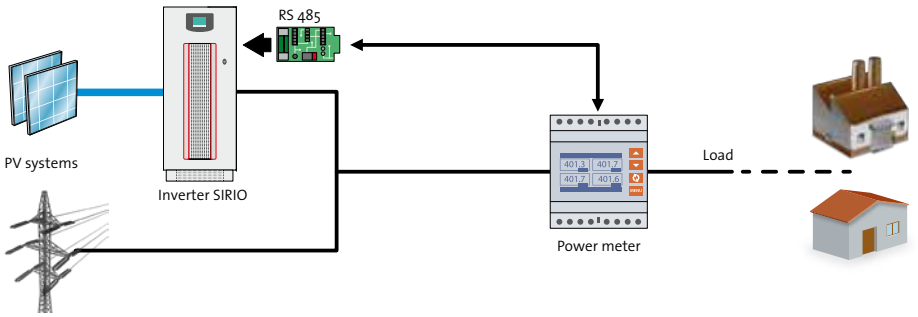

Technical data

TL INVERTERS

Sirio EASY 1500 / 2000 / 3000

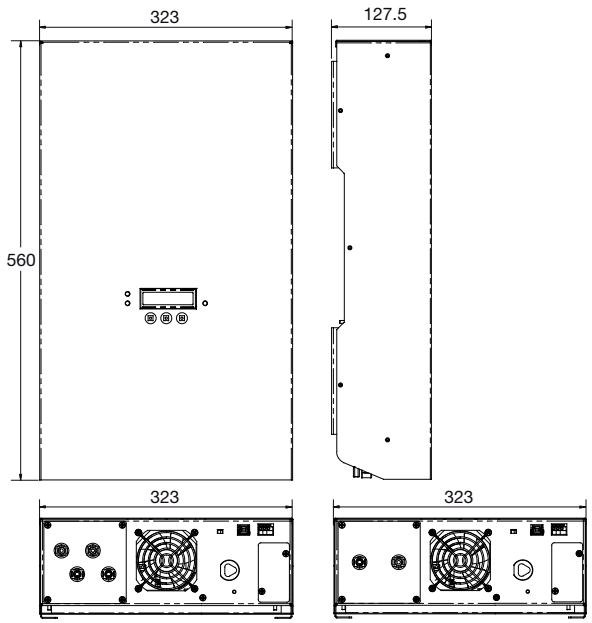

Sirio EVO 1500 / 2000 / 3000 / 4000

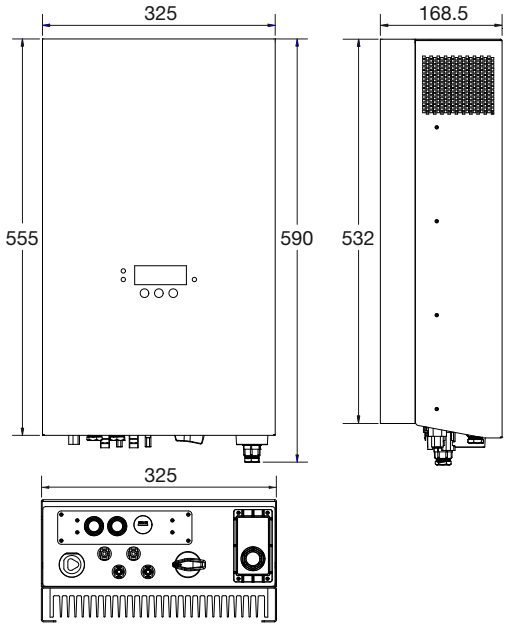

Sirio EVO 5000 / 6000

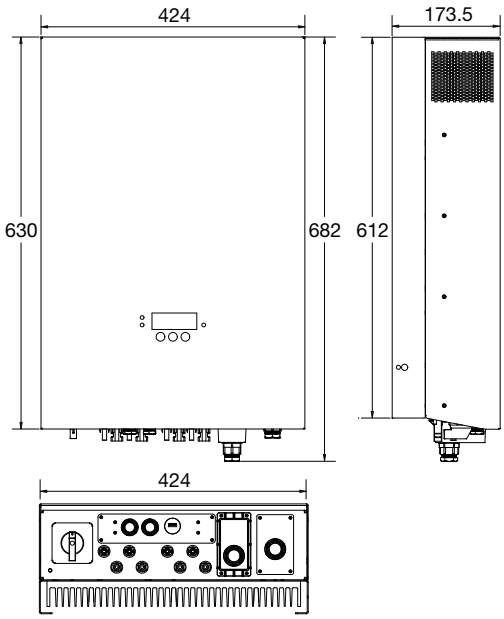

Sirio EVO 10000 / 12500

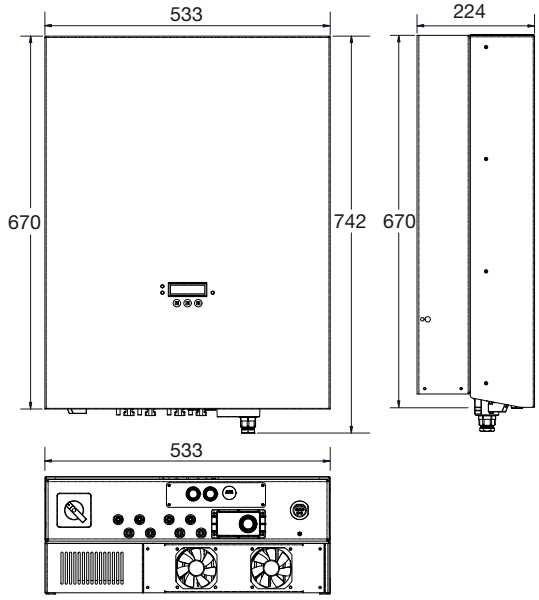

Sirio EASY 1500 / 2000 / 3000

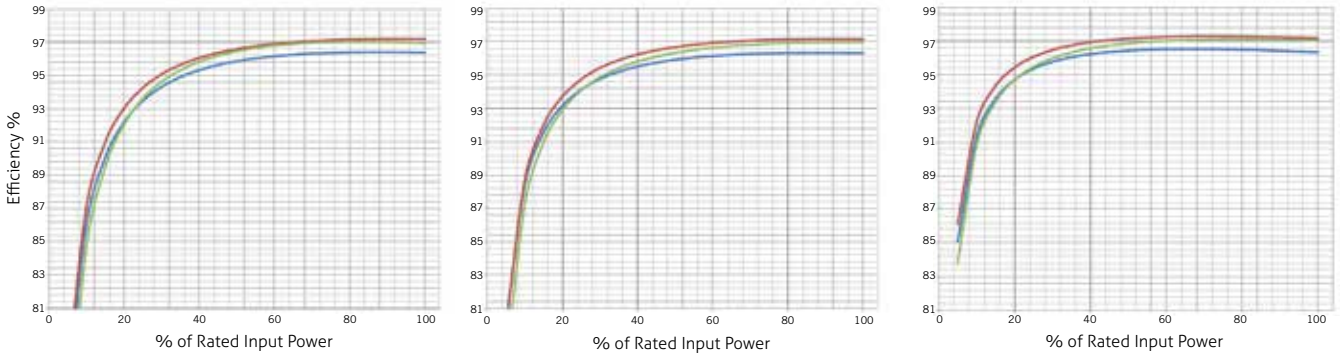

FEATURES
Colour: RAL 3020
Protection level: IP20 (indoor)
Acoustic noise: <35dBA

Vin= 250V
Vin= 370V
Vin= 425V

Sirio EVO 1500 / 2000

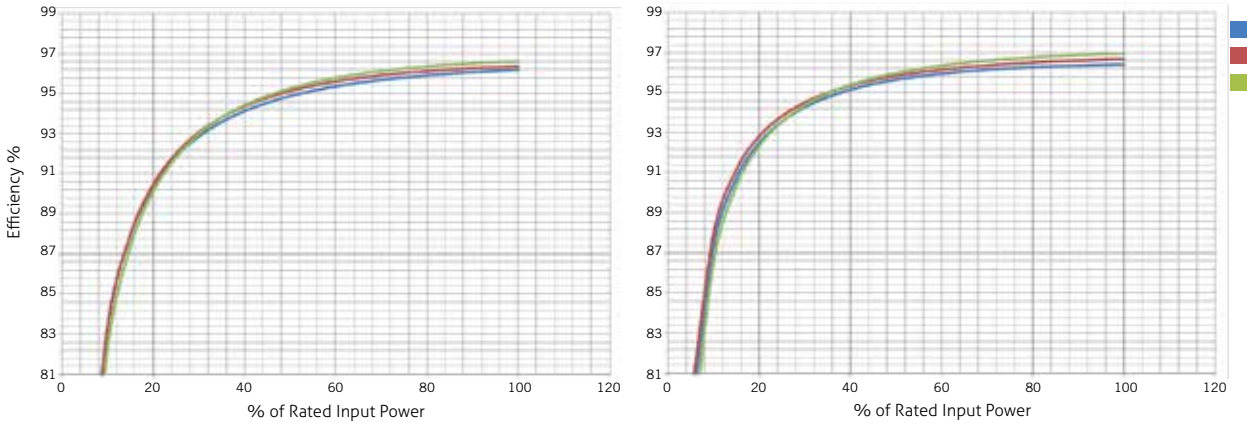

Vin= 350V
Vin= 450V
Vin= 600V

FEATURES
Colour: RAL 3020
Protection level: IP65
Acoustic noise: <35dBA

Sirio EVO 3000 / 4000

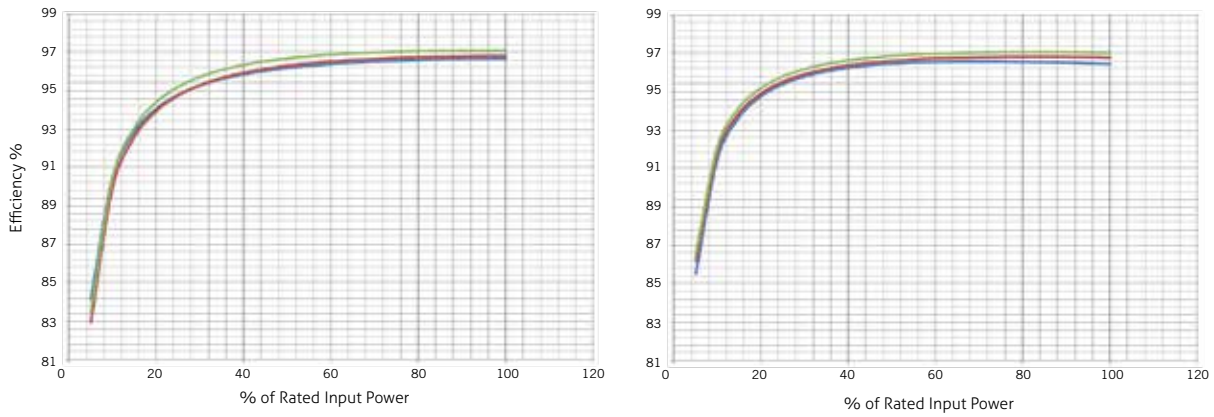

Vin= 350V
Vin= 450V
Vin= 600V

FEATURES
Colour: RAL 3020
Protection level: IP65
Acoustic noise: <35dBA

Sirio EVO 5000 / 6000

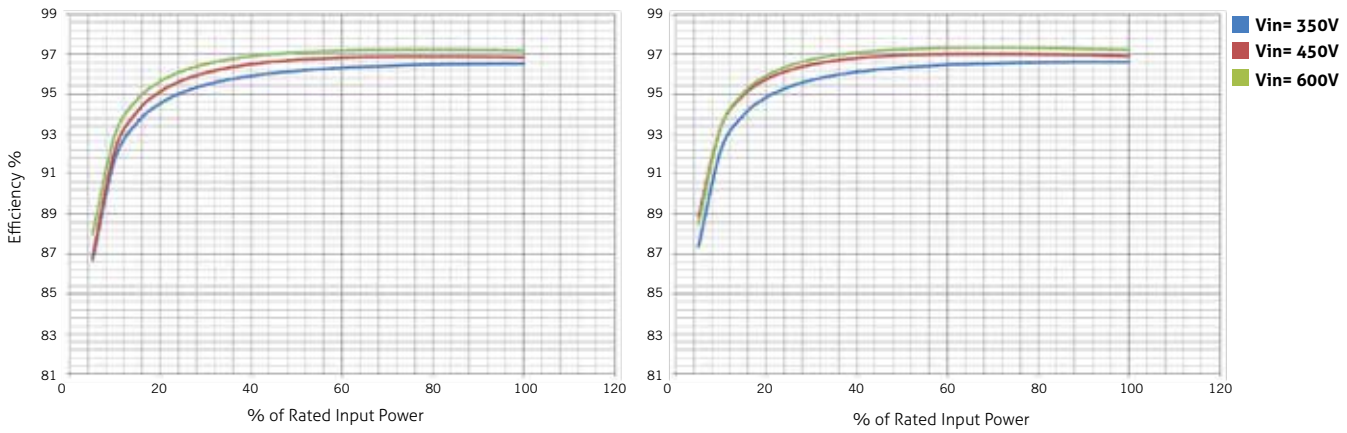

FEATURES
Colour: RAL 3020
Protection level: IP65
Acoustic noise: <35dBA

Sirio EVO 10000 / 12500

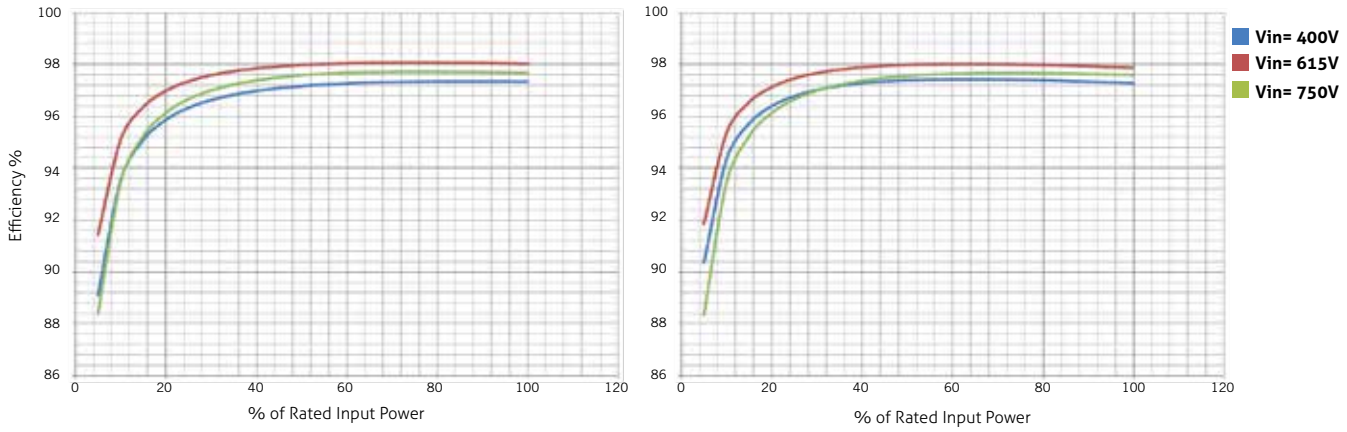

FEATURES
Colour: RAL 3020
Protection level: IP65
Acoustic noise: <35dBA (<45dBA with fans running)

CENTRAL INVERTERS

Sirio K12 / K15 / K18

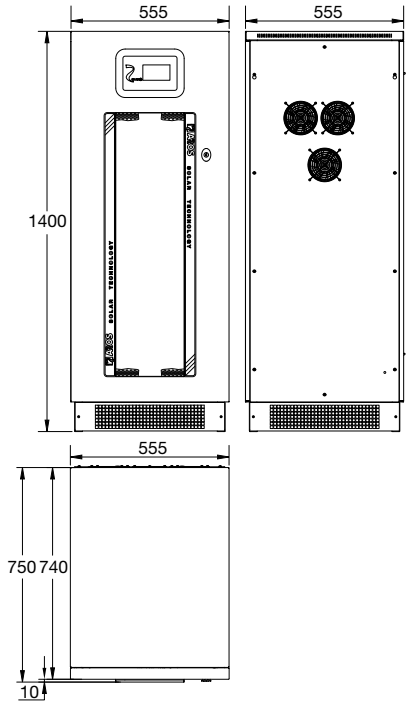

Sirio K25 / K33 / K40 / K25 HV / K33 HV / K40 HV

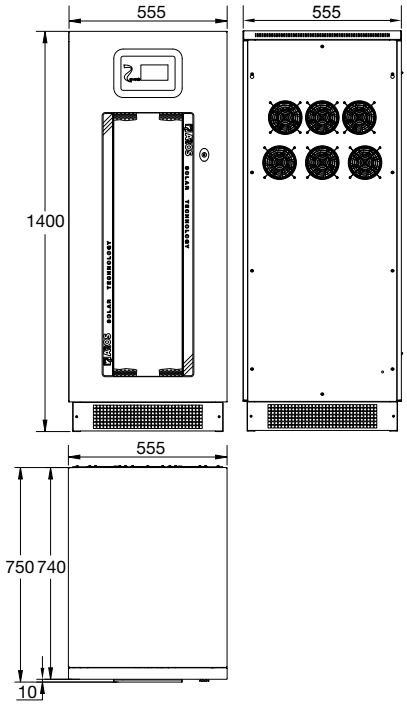

Sirio K64 / K80 / K100 / K64 HV / K80 HV / K100 HV

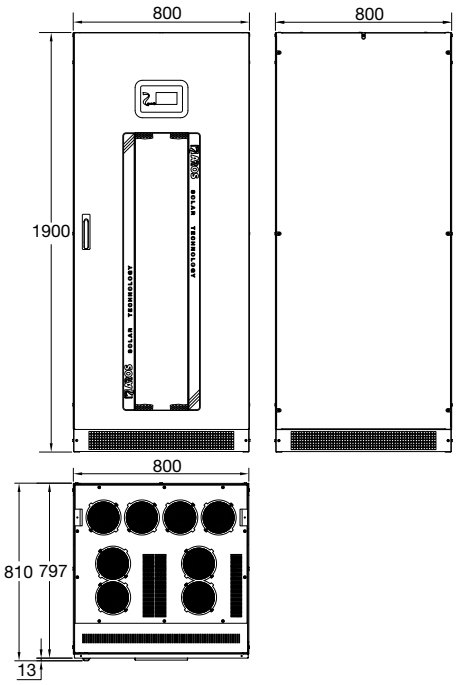

Sirio K200 / K200 HV / K250 HV

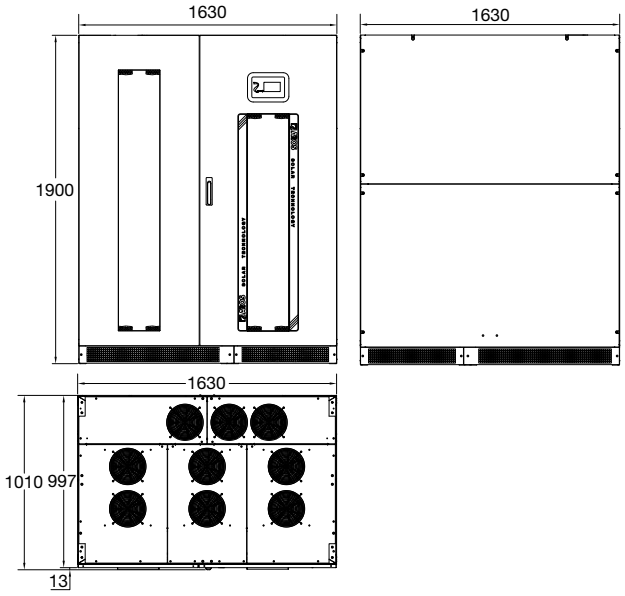

Sirio K12 / K15 / K18

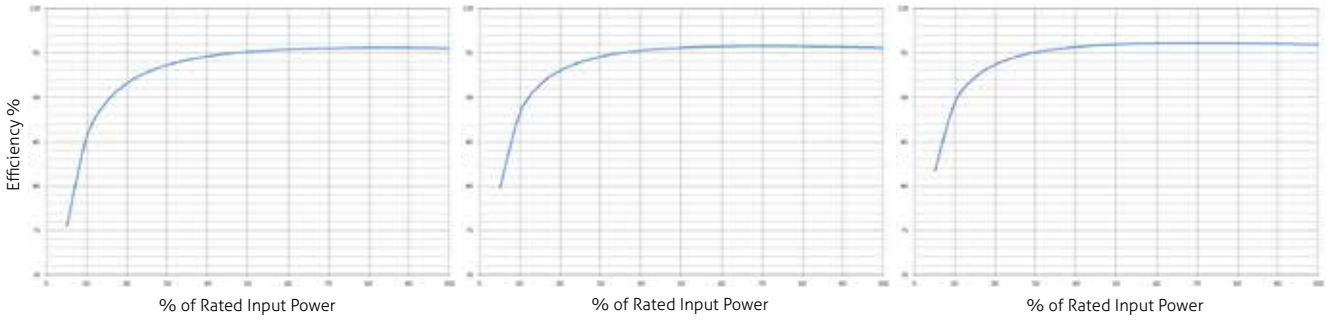

400 Vdc

FEATURES
Colour: RAL 7035
Protection level: IP20
Acoustic noise: <66dBA

Sirio K25 / K33 / K40

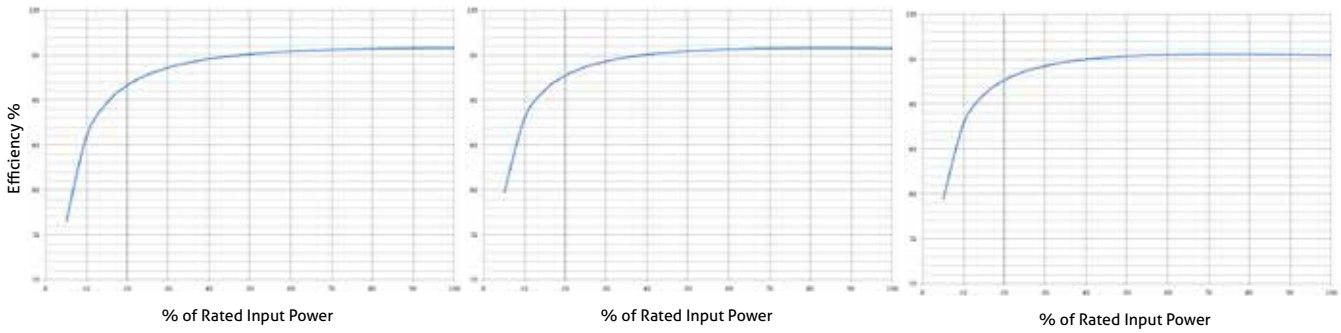

400 Vdc

FEATURES
Colour: RAL 7035
Protection level: IP20
Acoustic noise: <66dBA

Sirio K25 HV / K33 HV / K40 HV

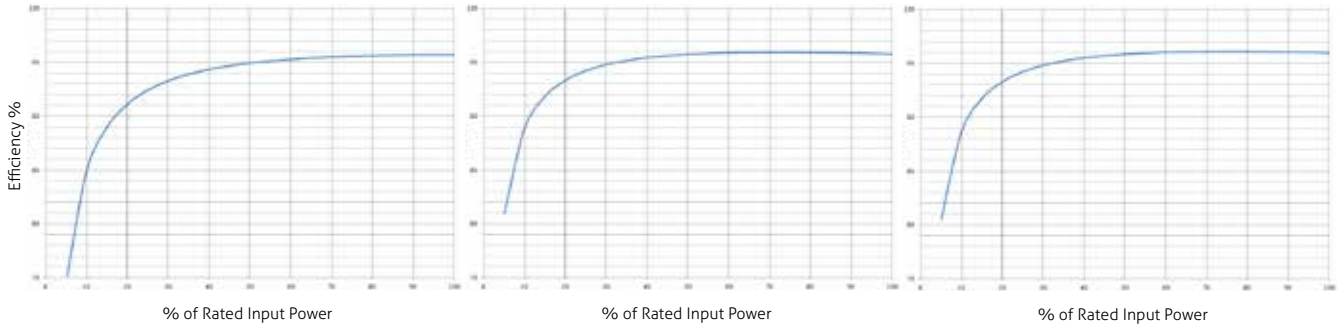

530 Vdc

FEATURES
Colour: RAL 7035
Protection level: IP20
Acoustic noise: <66dBA

Sirio K64 / K80 / K100

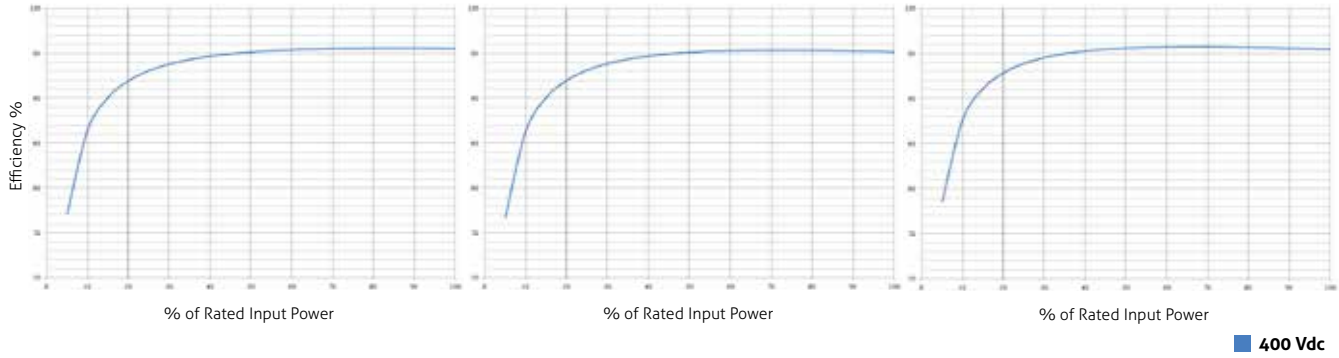

FEATURES
Colour: RAL 7035
Protection level: IP20
Acoustic noise: <68dBA

Sirio K64 HV / K80 HV / K100 HV

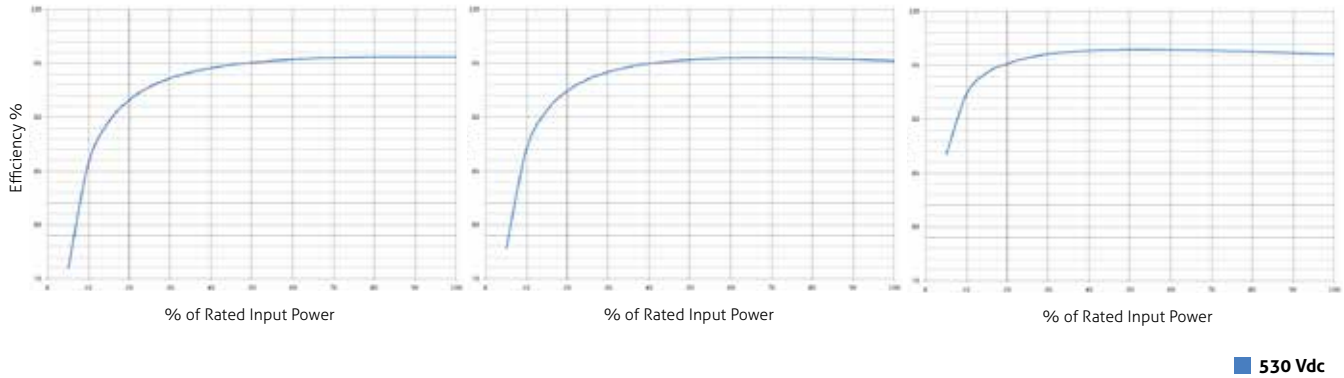

FEATURES
Colour: RAL 7035
Protection level: IP20
Acoustic noise: <68dBA

Sirio K200 / K200 HV / K250 HV

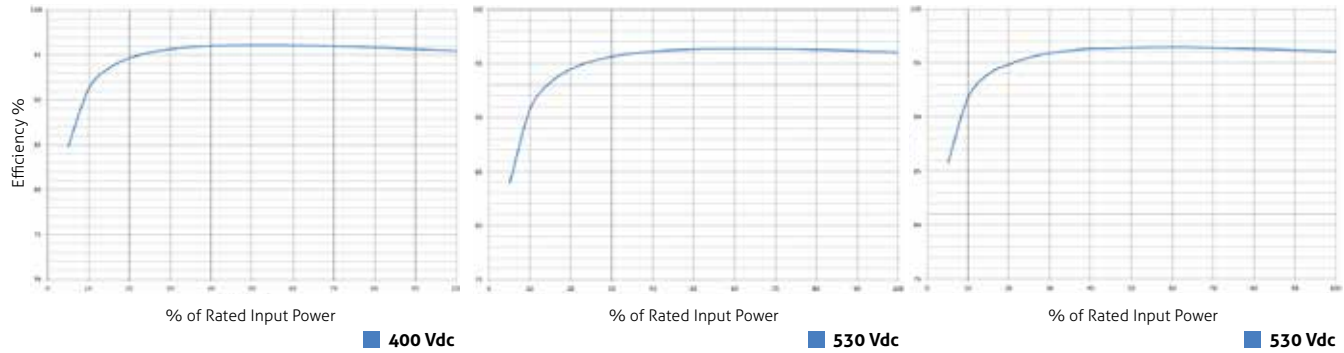

FEATURES
Colour: RAL 7035
Protection level: IP20
Acoustic noise: <72dBA

HV-MT CENTRAL INVERTERS

Sirio K100 HV-MT

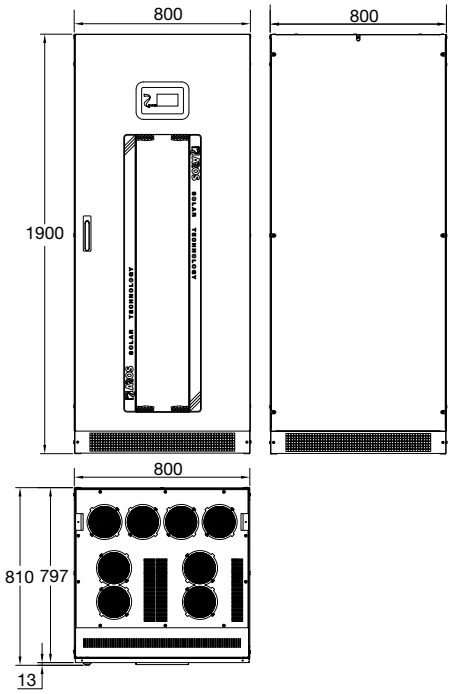

Sirio K200 HV-MT / K250 HV-MT

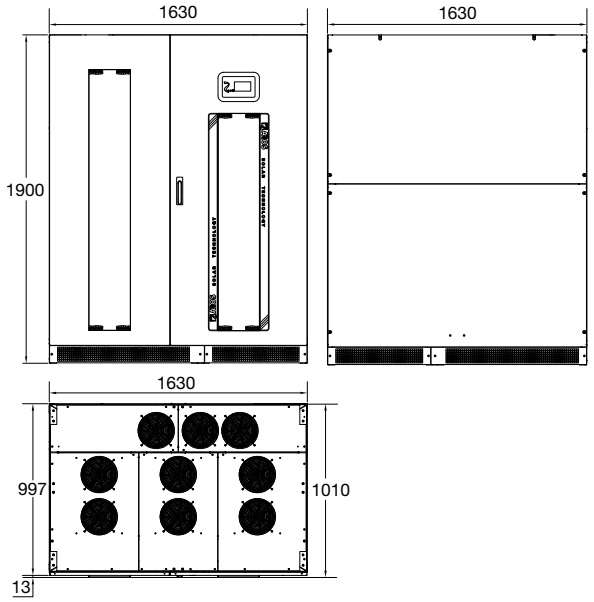

Sirio K330 HV-MT / K500 HV-MT

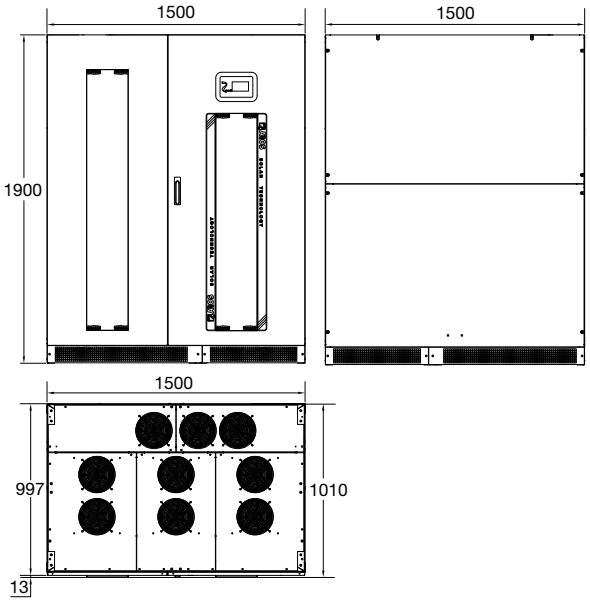

Sirio K800 HV-MT

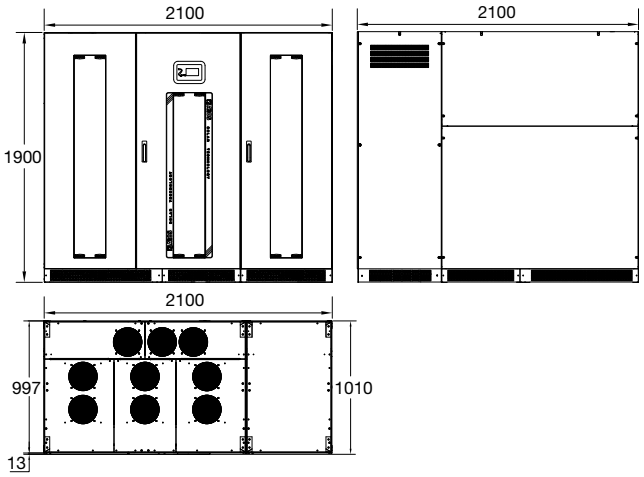

Sirio K100 HV-MT

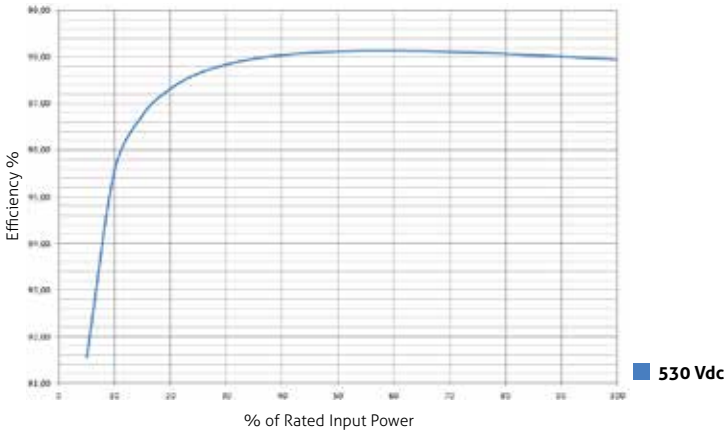

FEATURES
Colour: RAL 7035
Protection level: IP20
Acoustic noise: <68dBA

Sirio K200 HV-MT / K250 HV-MT

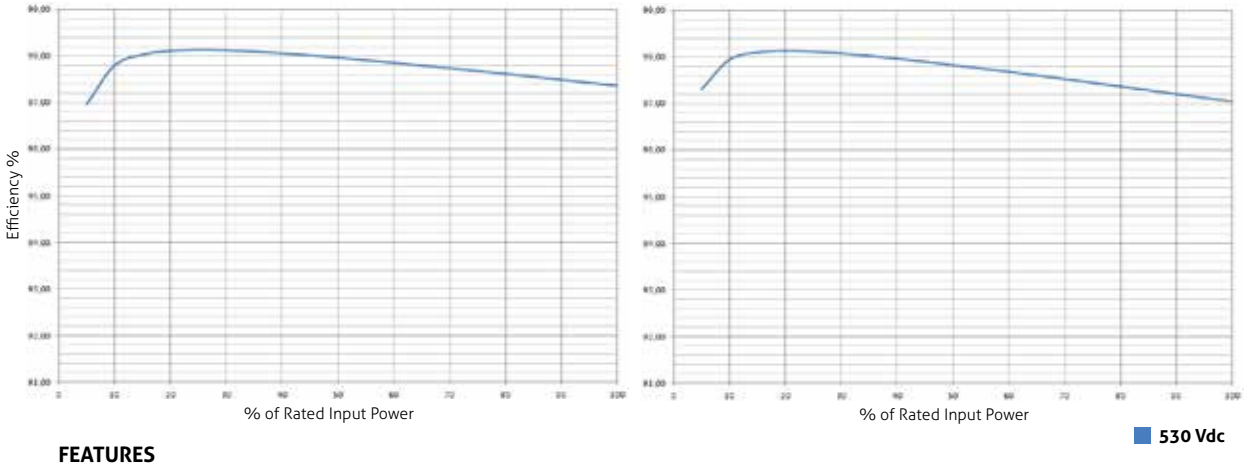

FEATURES
Colour: RAL 7035
Protection level: IP20
Acoustic noise: <72dBA

Sirio K330 HV-MT / K500 HV-MT and K800 HV-MT

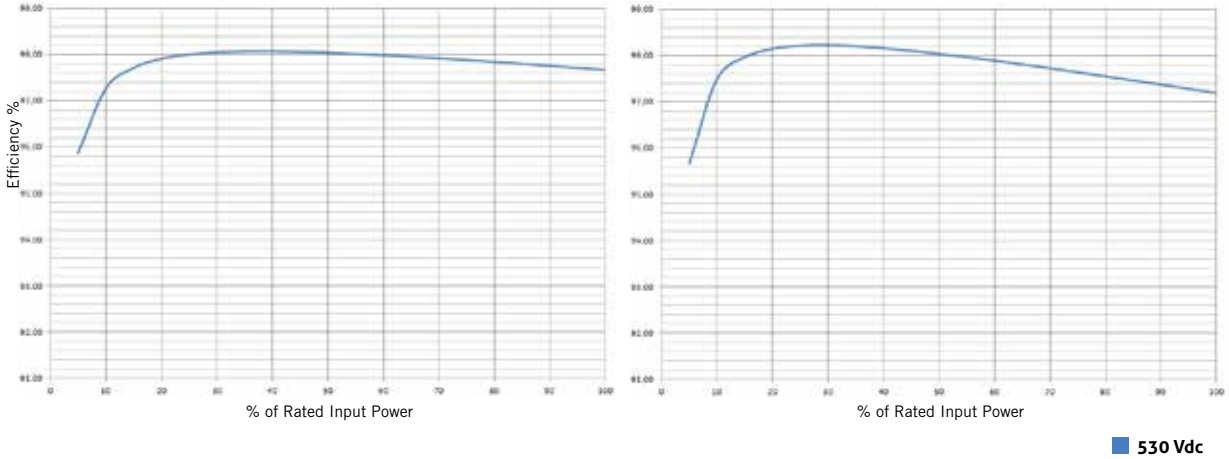

FEATURES
Colour: RAL 7035
Protection level: IP20
Acoustic noise: <72dBA

Operating Offices

RPS S.p.A.

ITALY

LEGNAGO (VR)
Head Office
Viale Europa, 7
37045 LEGNAGO (Verona)
Tel +39 0442 635811
Fax +39 0442 629098
www.riello-ups.com
riello@riello-ups.com

CORMANO (MI)
Sales Office
Via Somalia, 20
20032 CORMANO (Milano)
Tel +39 02 663271
Fax +39 02 66327351

ROME
Sales Office
Via Fosso della Magliana, 34/G
00148 ROME
Tel +39 06 65192125
Fax +39 06 65192247

PRE-SALES SUPPORT (TEC)
tec@riello-ups.com

AFTER-SALES SUPPORT (UPService)
service@riello-ups.com

UNITED KINGDOM

RIELLO UPS Ltd.
Unit 50 Clywedog Road North
Wrexham Industrial Estate
Wrexham LL13 9XN
Tel +44 800 269 394
Fax +44 1978 729 290

CONSTANT POWER SERVICES Ltd.
Riello House, Works Road,
Letchworth
SG6 1AZ Hertfordshire
Tel +44 330 1230125
Fax +44 1462 422754

GERMANY

RIELLO UPS GmbH
Wilhelm-Bergner-Str. 9b
21509 Glinde
Tel +49 40 / 527 211-0
Fax + 49 40 / 527 211-200

RIELLO POWER SYSTEMS GmbH
Neufahrner Str. 12b
85375 Neufahrn/Grüneck
Tel +49 8165 / 9458-0
Fax +49 8165 / 9458-26

FRANCE

RIELLO ONDULEURS S.a.r.l.
2/4 Rue du Bois Chaland,
ZAC du Bois Chaland
91090 Lisses
Tel +33 1 60 875454
Fax +33 1 60 875450

Agence Rhone Alpes - Sud
147 Avenue M. Mérieux,
Parc de Sacuny, Park Avenir 1
69530 Brignais
Tel +33 4 72 177108
Fax +33 4 78 351422

SPAIN & PORTUGAL

RIELLO TDL s.l. (Solar Division)
C/ Berguedà, 6 bis - Pol.Ind.
Plà de la Bruguera
08211Castellar del Vallès, Barcelona
Tel.: +34 (0)93 74 71 210
Fax: +34 (0)93 71 46 562

ROMANIA

S.C. Banattika S.r.l.
(Riello UPS Romania)
Str. Varsovia Nr. 4
307160 Dumbravita
Timis County - Romania
Tel +40 256 214 681
Fax +40 256 214 682

AUSTRALIA

RIELLO UPS AUSTRALIA Pty. Ltd.
Unit 22/80 Box Road
Taren Point NSW 2229
Tel +61 2 9531 1999
Fax +61 2 9531 1988

Unit 17/810-818 Princes Hwy
Springvale VIC 3171
Tel +61 3 9574 6922
Fax +61 3 9574 6933

PO Box 2251
Yokine South WA 6060
Tel +61 1300 138,709

ASIA PACIFIC

RIELLO UPS SINGAPORE Pte Ltd.
No. 506 Chai Chee Lane,
#07-01, Singapore 469026
Tel +65 6853 1190
Fax +65 6853 1176

CHINA

Riello UPS (Asia) Co., Ltd.
Bolg2, No.451 Duhui Road,
Minhang District-201108 Shanghai
Tel +86 21 50464748
Fax +86 21 50464648

Sales office Beijing
Unit 3B,Building B,
Jinyuan Century Business Centre,
No.1, Yuanda Road, Haidian District
100097 Beijing
Tel +86 10 82038861 / 8862
Fax +86 10 82038863

Sales office Guangzhou
Address Unit 1507 East Building,
Dongshan Square, No. 65,
Xianlie Zhong Road, Yuexiu District
510095, Guangzhou
Tel +86 20 28848001
Fax +86 20 28848002

Sales office Jinan
Room 3508, Building2
Inzone Center, No.22799
Jingshi Road, Jinan
Tel +86 531 87969877
Fax+86 531 87960977

Sales office Xi'an
A2604, Oak Constellation ,
No. 3, Ke Ji 5th Road,
High-Tech Zone, Xi'an
Tel +86 29 89526941
Fax+86 29 89526943

Sales office Chengdu
Room 1703, Level 17,
Raffles City Tower 2,
No. 3 Section 4,
South Renmin Road, Chengdu
Tel +86 28 6511 2870/71
Fax+86 28 6511 8199

INDIA

RIELLO PCI India Pvt. Ltd.
Prime Tower: 287-288
Udyog Vihar, Phase II
122015 Gurgaon (HR)
Tel.: +91-124-6656999
Fax: +91-124-4871698

www.riello-ups.com

Follow us on Social Networks

Notes

RIELLO ELETTRONICA

AROS

SOLAR TECHNOLOGY

RPS S.p.A. - Member of the Riello Elettronica Group
Viale Europa, 7 - 37045 LEGNAGO (Verona) - Italy
T +39 0442 635811 - F +39 0442 629098
www.riello-ups.com - riello@riello-ups.com

www.riello-ups.com

Follow us on Social Networks

CATGENXOY15CAGB